SCHEMATIC DIAGRAMS

JOHANNUS 300-SERIES

(TILTING STOPS)

ALTERATIONS RESERVED

CONTENTS

1. BLOCKDIAGRAM ORGAN
2. TRANSFORMER CONNECTIONS (PRIMARY VOLTAGES) and MAIN SWITCH CONNECTIONS
3. TRANSFORMER CONNECTIONS (SECUNDARY VOLTAGES)
4. POWER SUPPLY MASTER PROCESSOR and STOP LAMPS
5. SCANNING MANUALS: PEDAL and TRANSPOSER
6. SCANNING (TILTING) STOPS
7. SCANNING CAPTURE SYSTEM
8. INPUT KEYING and TRANSPOSER (master proc.)
9. INPUT STOPS 1-72 (master proc.)
10. INPUT STOPS 73-120 and CAPTURE SYSTEM (master proc.)
11. GENERAL CRESCENDO CIRCUIT (master proc.)
12. MASTER PROCESSOR (master proc.)
13. BLOCK DIAGRAM (1 RACK)
14. POSITION DIAGRAM CARDS (TOPVIEW)
15. PINNING BUSCARD CONNECTORS (RACK)
16. POWER SUPPLY (power supply card rack)
17. PROCESSOR (processor card rack)
18. TUNING GENRATORS: CHORUS and TREMULANT (generator card rack)
19. VOICE 1 OF 4 (vioce card rack)
20. EXPRESSION PEDAL CIRCUIT (ota card rack)
21. EXTERNAL CONTROLS and INTERFACE ECHO UNIT (ota card rack)
22. PRE-AMPLIFIERS and TONE CONTROLS (amplifier card rack)
23. POWER AMPLIFIER (amplifier card A & B rack)
24. POWER AMPLIFIER (amplifier card C rack)
25. EXTERNAL CONNECTIONS (mounted on the rearside of the organ)

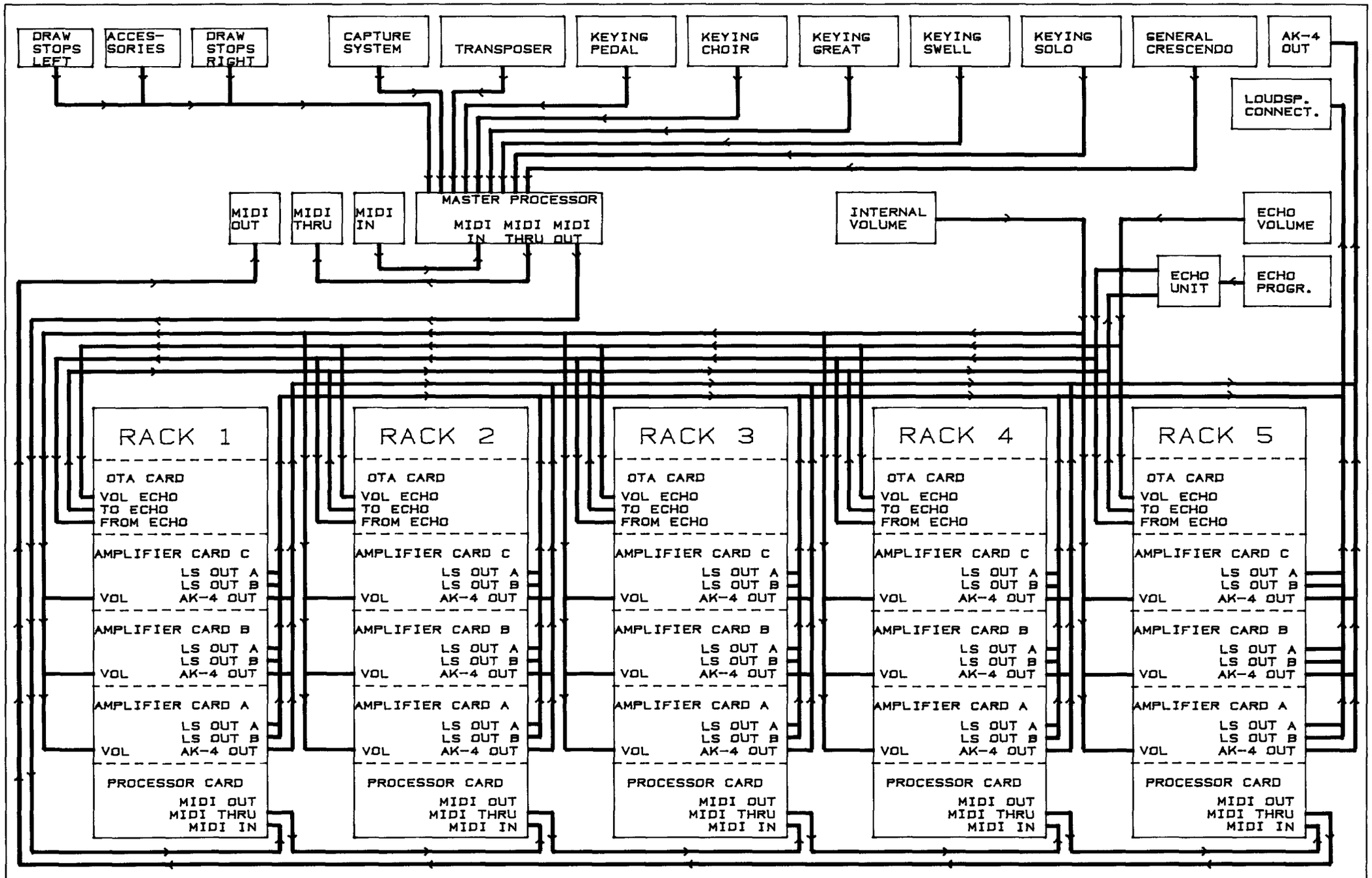

BLOCKDIAGRAM ORGAN			
DESIGN	LAB		REV.
DRAWN	VERSCHOOR	27-05-91	
JOHANNUS 300-SERIES			PAGE 1

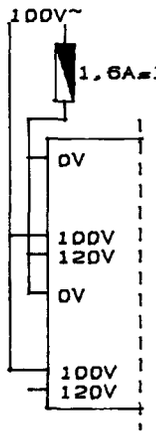

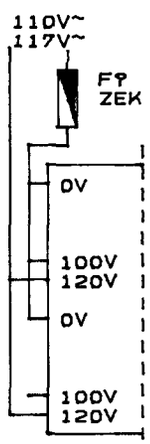

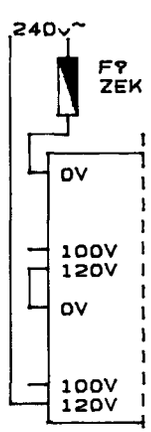

MAIN SWITCH CONNECTIONS FOR 5 RACKS

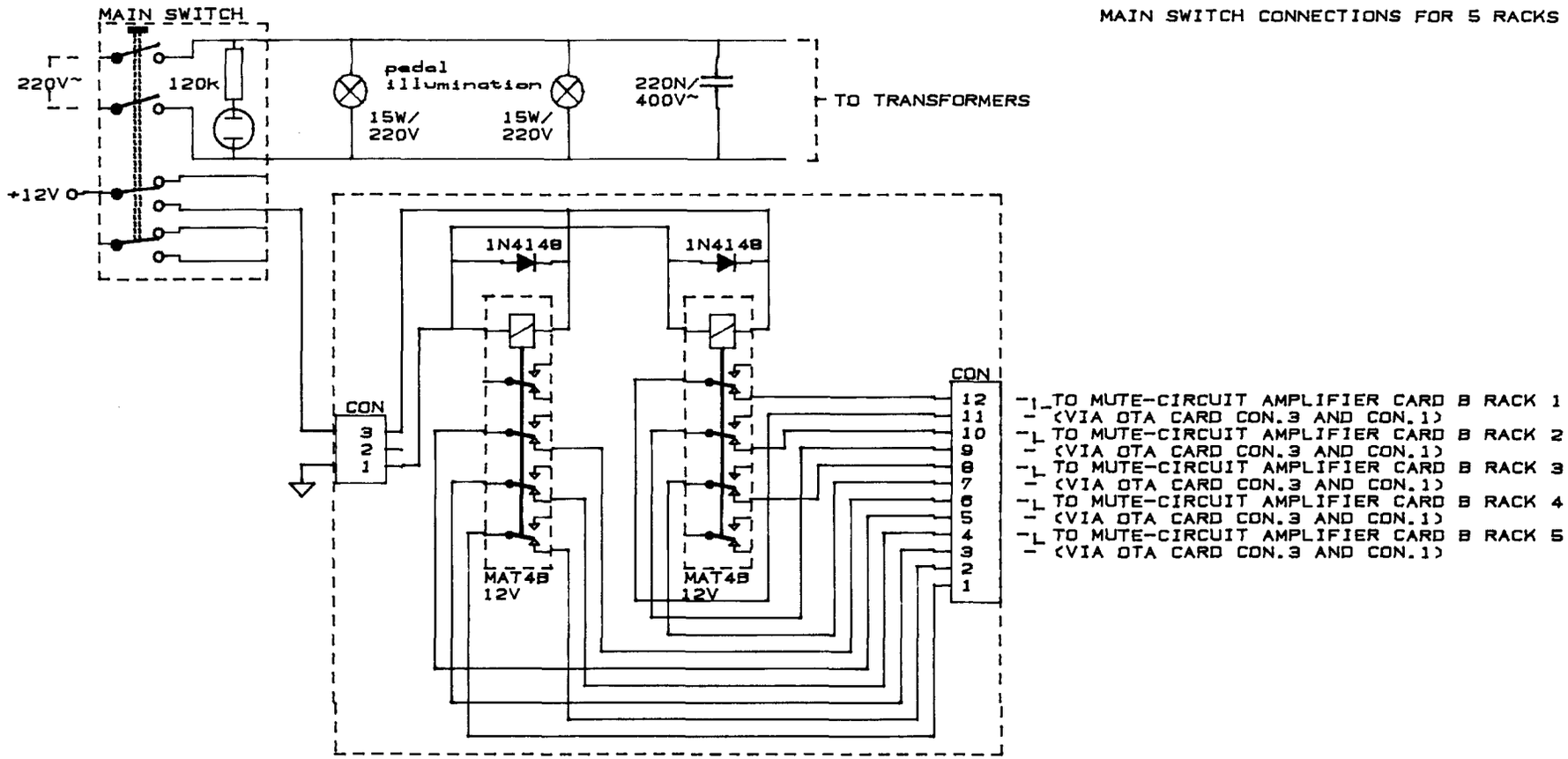

MAIN SWITCH CONNECTIONS FOR 1 TO 4 RACKS

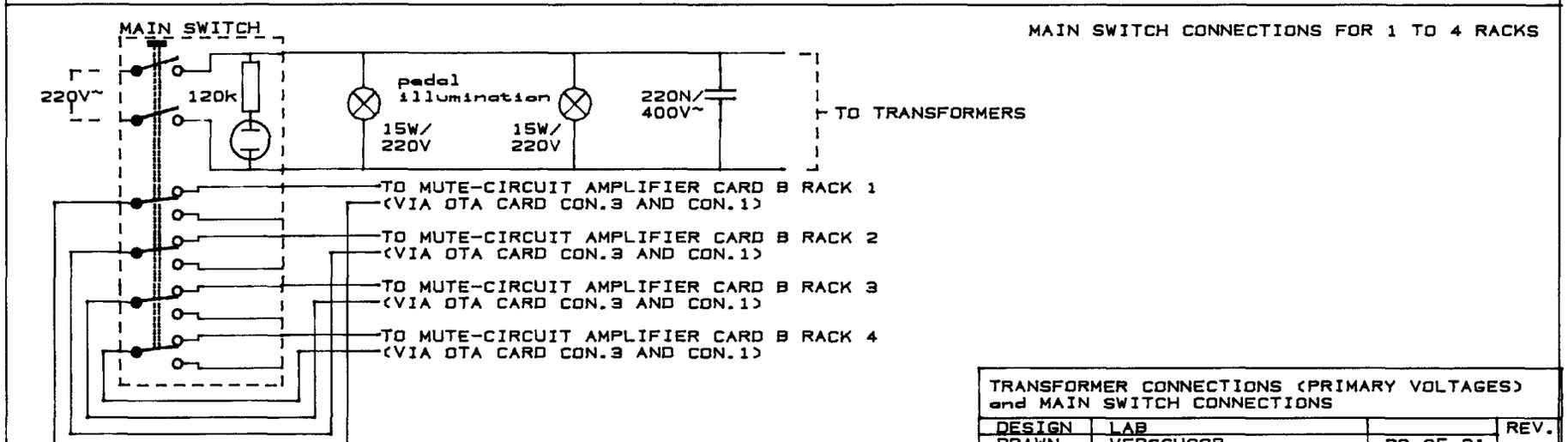

TRANSFORMER CONNECTIONS (PRIMARY VOLTAGES) and MAIN SWITCH CONNECTIONS			
DESIGN	LAB		REV.
DRAWN	VERSCHOOR	29-05-91	
JOHANNUS 300-SERIES			PAGE 2

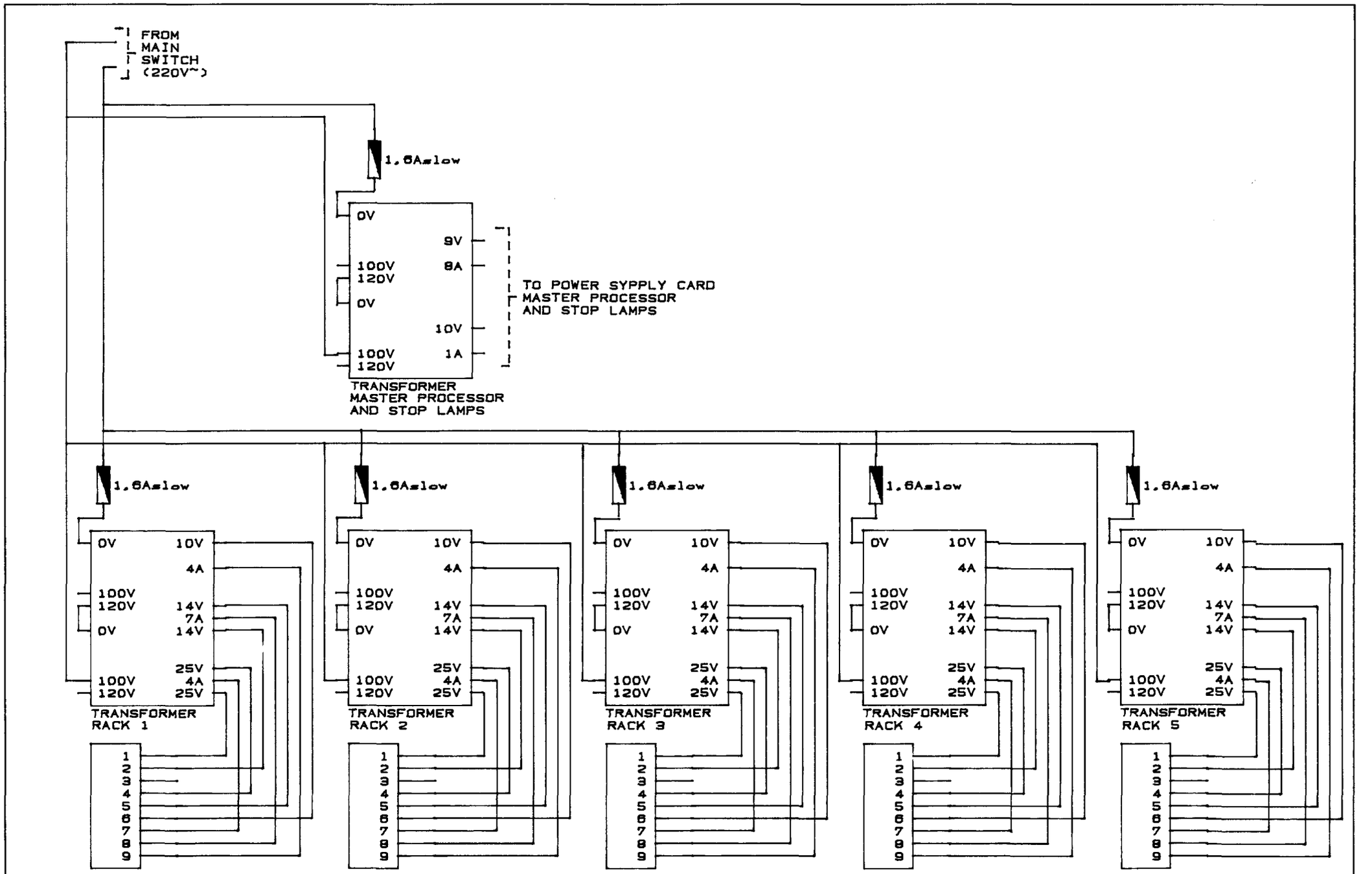

TRANSFORMER CONNECTIONS (SECUNDARY VOLTAGES)

DESIGN	LAB		REV.
DRAWN	VERSCHOOR	28-05-91	
JOHANNUS 300-SERIES			PAGE 3

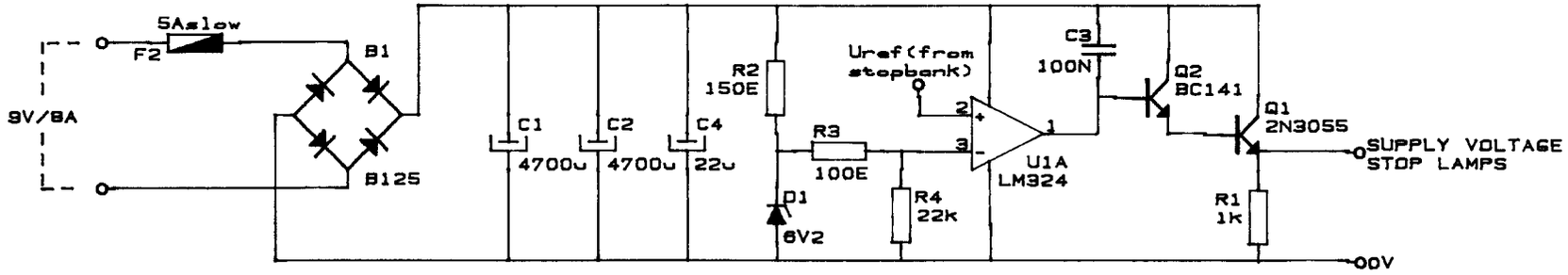

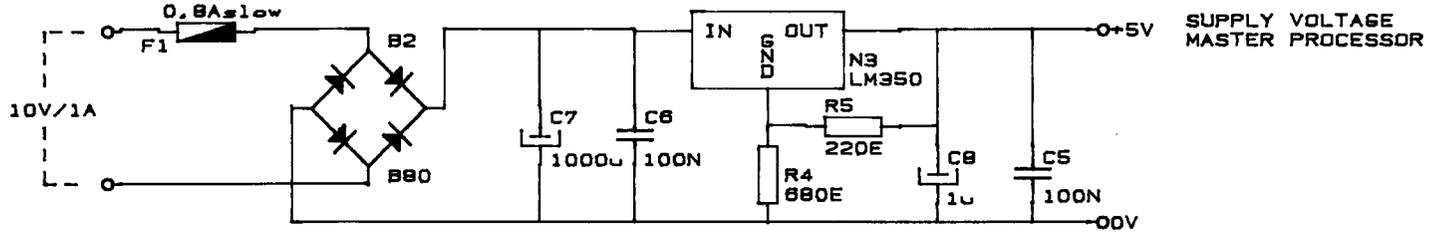

POWER SUPPLY CARD MASTER PROCESSOR and STOP LAMPS			
DESIGN	LAB		REV.
DRAWN	VERSCHOOR	30-05-91	
JOHANNUS 300-SERIES			PAGE 4

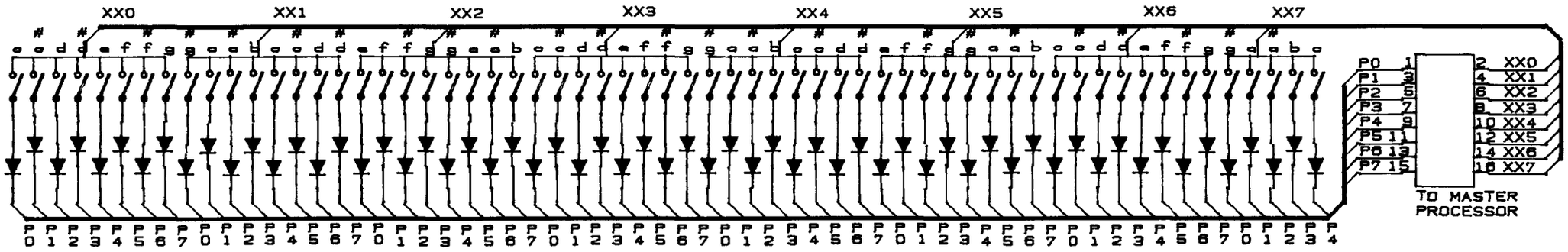

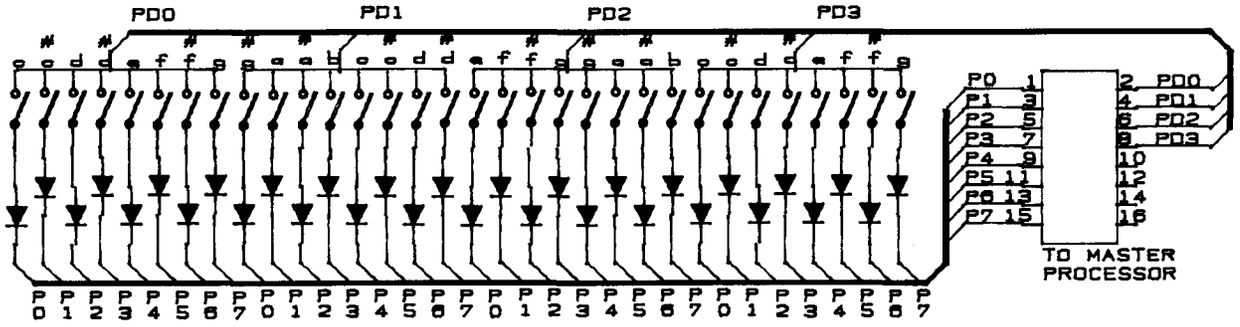

NOTE: THE NAMES FOR THE SCANNING SIGNALS
XX0 - XX7 ARE DIFFERENT FOR EACH MANUAL.
THE NAMES ARE AS FOLLOWS: CHOIR: CH0 - CH7
GREAT: GR0 - GR7
SWELL: SW0 - SW7
SOLO : SL0 - SL7

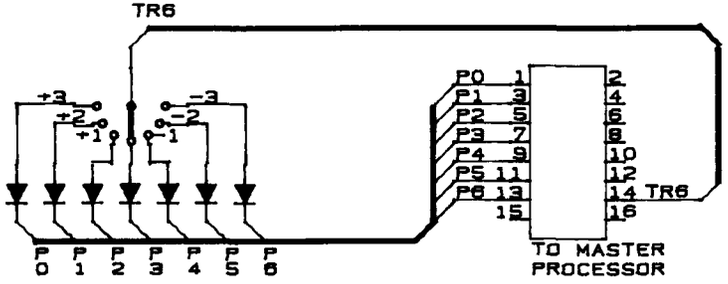

SCANNING MANUALS: PEDAL and TRANSPOSER			
DESIGN	LAB		REV.
DRAWN	VERSCHOOR	30-05-91	
JOHANNUS 300-SERIES			PAGE 5

STOP LIST OPUS 325

PEDAL

		VOICENR	CON/PIN
DOUBLE BASS	16'	ST 1	10 /12
SUBBASS	16'	ST 2	10 /11
OCTAVE	8'	ST 3	10 /10
VIOLON	8'	ST 4	10 / 9
GEDACKT	8'	ST 5	10 / 8
CHORALBASS	4'	ST 6	10 / 7
MIXTURE	III	ST 7	10 / 6
BOMBARDE	32'	ST 8	10 / 5
CONTRA TRUMPET	16'	ST 9	10 / 4
TRUMPET	8'	ST10	10 / 3
CLARION	4'	ST11	10 / 2

SWELL

		VOICENR	CON/PIN
QUINTATON	16'	ST12	10 / 1
OPEN DIAPASON	8'	ST13	11 /12
VIOLA	8'	ST14	11 /11
CELESTE	8'	ST15	11 /10
STOPPED FLUTE	8'	ST16	11 / 9
OCTAVE	4'	ST17	11 / 8
RÖHRFLUTE	4'	ST18	11 / 7
FLUTE TWELFTH	2 2/3'	ST19	11 / 6
WALDFLUTE	2'	ST20	11 / 5
NAZARD	1 1/3'	ST21	11 / 4
SIFFLUTE	1'	ST22	11 / 3
SESQUIALTER	II	ST23	11 / 2
RAUSCHPFEIFE	II-IV	ST24	11 / 1
FAGOTTO	16'	ST25	9 /12
CROMORNE	8'	ST26	9 /11
VOX HUMANA	8'	ST27	9 /10

GREAT

		VOICENR	CON/PIN
BOURDON	16'	ST28	9 / 9
DIAPASON	8'	ST29	9 / 8
GAMBA	8'	ST30	9 / 7
RÖHRFLUTE	8'	ST31	9 / 6
OCTAVE	4'	ST32	9 / 5
OPEN FLUTE	4'	ST33	9 / 4
TWELFTH	2 2/3'	ST34	9 / 3
SUPEROCTAVE	2'	ST35	9 / 2
CONICAL FLUTE	2'	ST36	9 / 1
CORNET	IV	ST37	8 /12
MIXTURE	V-VII	ST38	8 /11
SCHARF	III-V	ST39	8 /10
CONTRA TRUMPET	16'	ST40	8 / 9
TRUMPET	8'	ST41	8 / 8

ACCESSORIES

	VOICENR	CON/PIN
SWELL TO GREAT	ST42	8 / 7
GREAT TO PEDAL	ST43	8 / 6
SWELL TO PEDAL	ST44	8 / 5
TREMULANT GREAT	ST45	8 / 4
TREMULANT SWELL	ST46	8 / 3
CHORUS	ST47	8 / 2

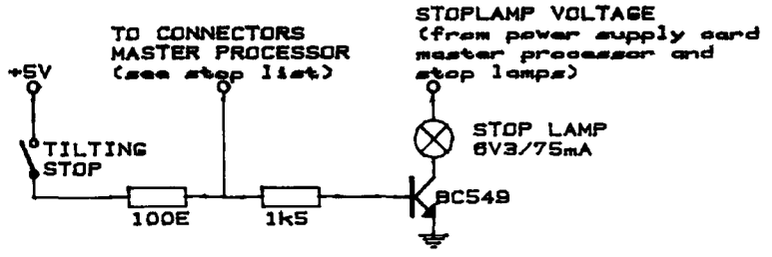

SCANNING (TILTING) STOPS			
DESIGN	LAB		REV.
DRAWN	VERSCHOOR	04-06-91	
JOHANNUS 300-SERIES			PAGE 6

STOP LIST OPUS 335

PEDAL

		VOICENR	CON/PIN
SUBBASS	32'	ST 1	10 /12
DOUBLE BASS	16'	ST 2	10 /11
SUBBASS	16'	ST 3	10 /10
ECHO BOURDON	16'	ST 4	10 / 9
OCTAVE	8'	ST 5	10 / 8
VIOLON	8'	ST 6	10 / 7
GEDACKT	8'	ST 7	10 / 6
CHORALBASS	4'	ST 8	10 / 5
BASSFLUTE	4'	ST 9	10 / 4
MIXTURE	III	ST10	10 / 3
BOMBARDE	32'	ST11	10 / 2
CONTRA TRUMPET	16'	ST12	10 / 1
TRUMPET	8'	ST13	11 /12
CLARION	4'	ST14	11 /11

SWELL

		VOICENR	CON/PIN
QUINTATON	16'	ST15	11 /10
OPEN DIAPASON	8'	ST16	11 / 9
VIOLA	8'	ST17	11 / 8
CELESTE	8'	ST18	11 / 7
FLUTE HARMONIQUE	8'	ST19	11 / 6
STOPPED FLUTE	8'	ST20	11 / 5
OCTAVE	4'	ST21	11 / 4
GEMSHORN	4'	ST22	11 / 3
RÖHRFLUTE	4'	ST23	11 / 2
FLUTE TWELFTH	2 2/3'	ST24	11 / 1
OCTAVE	2'	ST25	9 /12
WALDFLUTE	2'	ST26	9 /11
NAZARD	1 1/3'	ST27	9 /10
OCTAVE	1'	ST28	9 / 9
SESQUIALTER	II	ST29	9 / 8
RAUSCHPFEIFE	II-IV	ST30	9 / 7
FAGOTTO	16'	ST31	9 / 6
CROMORNE	8'	ST32	9 / 5
VOX HUMANA	8'	ST33	9 / 4
SCHALMEY	4'	ST34	9 / 3

GREAT

		VOICENR	CON/PIN
BOURDON	16'	ST35	9 / 2
OPEN DIAPASON	8'	ST36	9 / 1
DIAPASON	8'	ST37	8 /12
GAMBA	8'	ST38	8 /11
RÖHRFLUTE	8'	ST39	8 /10
OCTAVE	4'	ST40	8 / 9
SALICIONAL	4'	ST41	8 / 8
OPEN FLUTE	4'	ST42	8 / 7
TWELFTH	2 2/3'	ST43	8 / 6
SUPEROCTAVE	2'	ST44	8 / 5
CONICAL FLUTE	2'	ST45	8 / 4
LARIGOT	1 1/3'	ST46	8 / 3
CORNET	IV	ST47	8 / 2
MIXTURE	V-VII	ST48	8 / 1
SCHARF	III-V	ST49	6 /12
CONTRA TRUMPET	16'	ST50	6 /11
TRUMPET	8'	ST51	6 /10
CLARION	4'	ST52	6 / 9

ACCESSORIES

	VOICENR	CON/PIN
SWELL TO GREAT	ST53	6 / 8
GREAT TO PEDAL	ST54	6 / 7
SWELL TO PEDAL	ST55	6 / 6
TREMULANT GREAT	ST56	6 / 5
TREMULANT SWELL	ST57	6 / 4
CHORUS	ST58	6 / 3

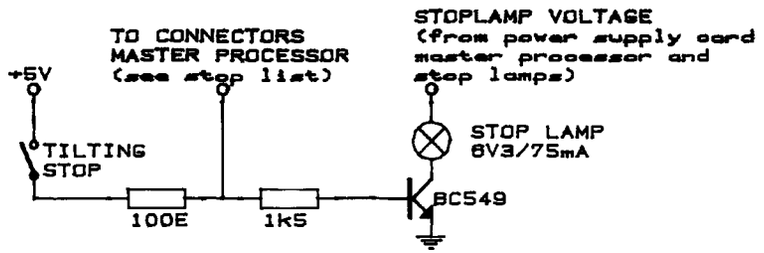

SCANNING (TILTING) STOPS			
DESIGN	LAB		REV.
DRAWN	VERSCHOOR	04-06-91	
JOHANNUS 300-SERIES			PAGE 6

STOP LIST OPUS 355

PEDAL

		VOICENR	CON/PIN
DOUBLE BASS	16'	ST 1	10 /12
SUBBASS	16'	ST 2	10 /11
OCTAVE	8'	ST 3	10 /10
VIOLON	8'	ST 4	10 / 9
GEDACKT	8'	ST 5	10 / 8
CHORALBASS	4'	ST 6	10 / 7
MIXTURE	III	ST 7	10 / 6
BOMBARDE	32'	ST 8	10 / 5
CONTRA TRUMPET	16'	ST 9	10 / 4
TRUMPET	8'	ST10	10 / 3
CLARION	4'	ST11	10 / 2

SWELL

		VOICENR	CON/PIN
QUINTATON	16'	ST12	10 / 1
OPEN DIAPASON	8'	ST13	11 /12
VIOLA	8'	ST14	11 /11
CELESTE	8'	ST15	11 /10
STOPPED FLUTE	8'	ST16	11 / 9
OCTAVE	4'	ST17	11 / 8
RÖHRFLUTE	4'	ST18	11 / 7
FLUTE TWELFTH	2 2/3'	ST19	11 / 6
WALDFLUTE	2'	ST20	11 / 5
NAZARD	1 1/3'	ST21	11 / 4
OCTAVE	1'	ST22	11 / 3
SESQUIALTER	II	ST23	11 / 2
RAUSCHPFEIFE	II-IV	ST24	11 / 1
FAGOTTO	16'	ST25	9 /12
CROMORNE	8'	ST26	9 /11
VOX HUMANA	8'	ST27	9 /10

GREAT

		VOICENR	CON/PIN
BOURDON	16'	ST28	9 / 9
DIAPASON	8'	ST29	9 / 8
GAMBA	8'	ST30	9 / 7
RÖHRFLUTE	8'	ST31	9 / 6
OCTAVE	4'	ST32	9 / 5
OPEN FLUTE	4'	ST33	9 / 4
TWELFTH	2 2/3'	ST34	9 / 3
SUPEROCTAVE	2'	ST35	9 / 2
CONICAL FLUTE	2'	ST36	9 / 1
CORNET	IV	ST37	8 /12
MIXTURE	V-VII	ST38	8 /11
SCHARF	III-V	ST39	8 /10
CONTRA TRUMPET	16'	ST40	8 / 9
TRUMPET	8'	ST41	8 / 8

CHOIR

		VOICENR	CON/PIN
LIEBLICH GEDECKT	16'	ST42	8 / 7
BOURDON	8'	ST43	8 / 6
OCTAVE	4'	ST44	8 / 5
NACHTHORN	4'	ST45	8 / 4
NAZARD	2 2/3'	ST46	8 / 3
OCTAVE	2'	ST47	8 / 2
FLUTE	2'	ST48	8 / 1
TIERCE	1 3/5'	ST49	6 /12
SUPERQUINT	1 1/3'	ST50	6 /11
CYMBAL	II-III	ST51	6 /10
CLARINET	8'	ST52	6 / 9

ACCESSORIES

	VOICENR	CON/PIN
CHOIR TO GREAT	ST53	6 / 8
SWELL TO GREAT	ST54	6 / 7
SWELL TO CHOIR	ST55	6 / 6
CHOIR TO PEDAL	ST56	6 / 5
GREAT TO PEDAL	ST57	6 / 4
SWELL TO PEDAL	ST58	6 / 3
TREMULANT CHOIR	ST59	6 / 2
TREMULANT GREAT	ST60	6 / 1
TREMULANT SWELL	ST61	7 /12
CHORUS	ST62	7 /11

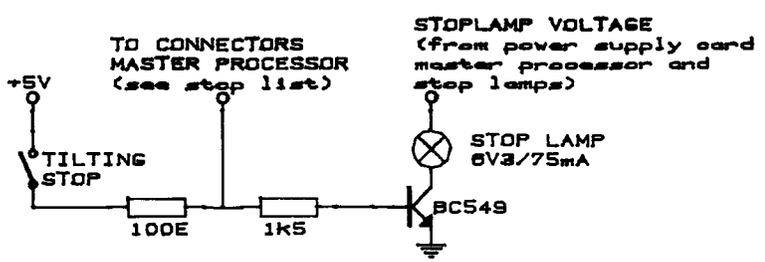

SCANNING (TILTING) STOPS			
DESIGN	LAB		REV.
DRAWN	VERSCHOOR	04-06-91	
JOHANNUS 300-SERIES			PAGE 6

STOP LIST OPUS 365

PEDAL

		VOICENR	CON/PIN
SUBBASS	32'	ST 1	10 /12
DOUBLE BASS	16'	ST 2	10 /11
SUBBASS	16'	ST 3	10 /10
ECHO BOURDON	16'	ST 4	10 / 9
PRESTANT	8'	ST 5	10 / 8
VIOLON	8'	ST 6	10 / 7
GEDACKT	8'	ST 7	10 / 6
CHORALBASS	4'	ST 8	10 / 5
BASSFLUTE	4'	ST 9	10 / 4
MIXTURE	III	ST10	10 / 3
BOMBARDE	32'	ST11	10 / 2
CONTRA TRUMPET	16'	ST12	10 / 1
TRUMPET	8'	ST13	11 /12
CLARION	4'	ST14	11 /11

SWELL

		VOICENR	CON/PIN
QUINTATON	16'	ST15	11 /10
OPEN DIAPASON	8'	ST16	11 / 9
VIOLA	8'	ST17	11 / 8
CELESTE	8'	ST18	11 / 7
FLUTE HARMONIQUE	8'	ST19	11 / 6
STOPPED FLUTE	8'	ST20	11 / 5
OCTAVE	4'	ST21	11 / 4
GEMSHORN	4'	ST22	11 / 3
RÖHRFLUTE	4'	ST23	11 / 2
FLUTE TWELFTH	2 2/3'	ST24	11 / 1
OCTAVE	2'	ST25	9 /12
WALDFLUTE	2'	ST26	9 /11
NAZARD	1 1/3'	ST27	9 /10
OCTAVE	1'	ST28	9 / 9
SESQUIALTER	II	ST29	9 / 8
RAUSCHPFEIFE	II-IV	ST30	9 / 7
FAGOTTO	16'	ST31	9 / 6
CROMORNE	8'	ST32	9 / 5
VOX HUMANA	8'	ST33	9 / 4
SCHALMEY	4'	ST34	9 / 3

GREAT

		VOICENR	CON/PIN
BOURDON	16'	ST35	9 / 2
OPEN DIAPASON	8'	ST36	9 / 1
DIAPASON	8'	ST37	8 /12
GAMBA	8'	ST38	8 /11
RÖHRFLUTE	8'	ST39	8 /10
OCTAVE	4'	ST40	8 / 9
SALICIONAL	4'	ST41	8 / 8
OPEN FLUTE	4'	ST42	8 / 7
TWELFTH	2 2/3'	ST43	8 / 6
SUPEROCTAVE	2'	ST44	8 / 5
CONICAL FLUTE	2'	ST45	8 / 4
LARIGOT	1 1/3'	ST46	8 / 3
CORNET	IV	ST47	8 / 2
MIXTURE	V-VII	ST48	8 / 1
SCHARF	III-V	ST49	6 /12
CONTRA TRUMPET	16'	ST50	6 /11
TRUMPET	8'	ST51	6 /10
CLARION	4'	ST52	6 / 9

CHOIR

		VOICENR	CON/PIN
LIEBLICH GEDECKT	16'	ST53	6 / 8
BOURDON	8'	ST54	6 / 7
OCTAVE	4'	ST55	6 / 6
NACHTHORN	4'	ST56	6 / 5
NAZARD	2 2/3'	ST57	6 / 4
OCTAVE	2'	ST58	6 / 3
FLUTE	2'	ST59	6 / 2
TIERCE	1 3/5'	ST60	6 / 1
SUPERQUINT	1 1/3'	ST61	7 /12
SIFFLUTE	1'	ST62	7 /11
CYMBAL	II-III	ST63	7 /10
CROMORNE	16'	ST64	7 / 9
CLARINET	8'	ST65	7 / 8

ACCESSORIES

	VOICENR	CON/PIN
CHOIR TO GREAT	ST66	7 / 7
SWELL TO GREAT	ST67	7 / 6
SWELL TO CHOIR	ST68	7 / 5
CHOIR TO PEDAL	ST69	7 / 4
GREAT TO PEDAL	ST70	7 / 3
SWELL TO PEDAL	ST71	7 / 2
TREMULANT CHOIR	ST72	7 / 1
TREMULANT GREAT	ST73	4 /12
TREMULANT SWELL	ST74	4 /11
CHORUS	ST75	4 /10

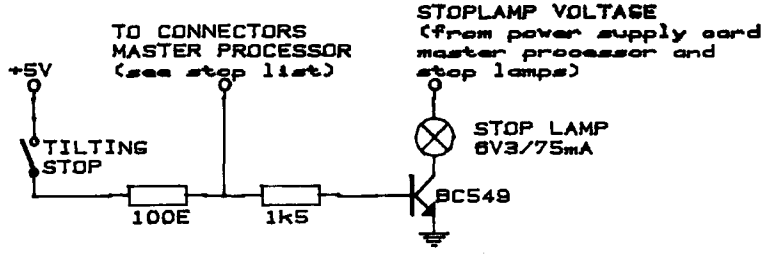

SCANNING (TILTING) STOPS			
DESIGN	LAB		REV.
DRAWN	VERSCHOOR	04-06-91	
JOHANNUS 300-SERIES			PAGE 6

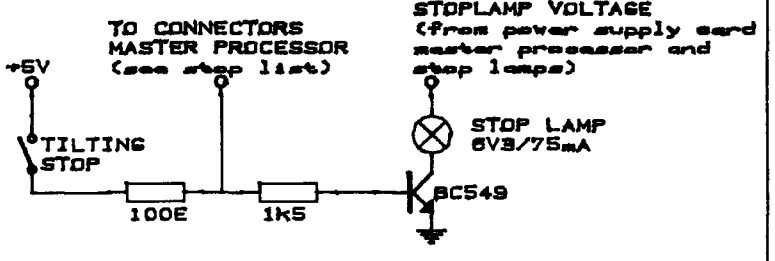

STOP LIST OPUS 485

PEDAL

		VOICENR	CON/PIN
SUBBASS	32'	ST 1	10 /12
DOUBLE BASS	16'	ST 2	10 /11
SUBBASS	16'	ST 3	10 /10
ECHO BOURDON	16'	ST 4	10 / 9
PRESTANT	8'	ST 5	10 / 8
VIOLON	8'	ST 6	10 / 7
GEDACKT	8'	ST 7	10 / 6
CHORALBASS	4'	ST 8	10 / 5
BASSFLUTE	4'	ST 9	10 / 4
MIXTURE	III	ST10	10 / 3
BOMBARDE	32'	ST11	10 / 2
CONTRA TRUMPET	16'	ST12	10 / 1
TRUMPET	8'	ST13	11 /12
CLARION	4'	ST14	11 /11

SWELL

		VOICENR	CON/PIN
QUINTATON	16'	ST15	11 /10
OPEN DIAPASON	8'	ST16	11 / 9
VIOLA	8'	ST17	11 / 8
CELESTE	8'	ST18	11 / 7
FLUTE HARMONIQUE	8'	ST19	11 / 6
STOPPED FLUTE	8'	ST20	11 / 5
OCTAVE	4'	ST21	11 / 4
GEMSHORN	4'	ST22	11 / 3
RÖHRFLUTE	4'	ST23	11 / 2
FLUTE TWELFTH	2 2/3'	ST24	11 / 1
OCTAVE	2'	ST25	9 /12
WALDFLUTE	2'	ST26	9 /11
NAZARD	1 1/3'	ST27	9 /10
OCTAVE	1'	ST28	9 / 9
SESQUIALTER	II	ST29	9 / 8
RAUSCHPFEIFE	II-IV	ST30	9 / 7
FAGOTTO	16'	ST31	9 / 6
CROMORNE	8'	ST32	9 / 5
VOX HUMANA	8'	ST33	9 / 4
SCHALMEY	4'	ST34	9 / 3

GREAT

		VOICENR	CON/PIN
BOURDON	16'	ST35	9 / 2
OPEN DIAPASON	8'	ST36	9 / 1
DIAPASON	8'	ST37	8 /12
GAMBA	8'	ST38	8 /11
RÖHRFLUTE	8'	ST39	8 /10
OCTAVE	4'	ST40	8 / 9
SALICIONAL	4'	ST41	8 / 8
OPEN FLUTE	4'	ST42	8 / 7
TWELFTH	2 2/3'	ST43	8 / 6
SUPEROCTAVE	2'	ST44	8 / 5
CONICAL FLUTE	2'	ST45	8 / 4
LARIGOT	1 1/3'	ST46	8 / 3
CORNET	IV	ST47	8 / 2
MIXTURE	V-VII	ST48	8 / 1
SCHARF	III-V	ST49	6 /12
CONTRA TRUMPET	16'	ST50	6 /11
TRUMPET	8'	ST51	6 /10
CLARION	4'	ST52	6 / 9

SCANNING (TILTING) STOPS			
DESIGN	LAB		REV.
DRAWN	VERSCHOOR	04-06-91	
JOHANNUS 300-SERIES			PAGE 6

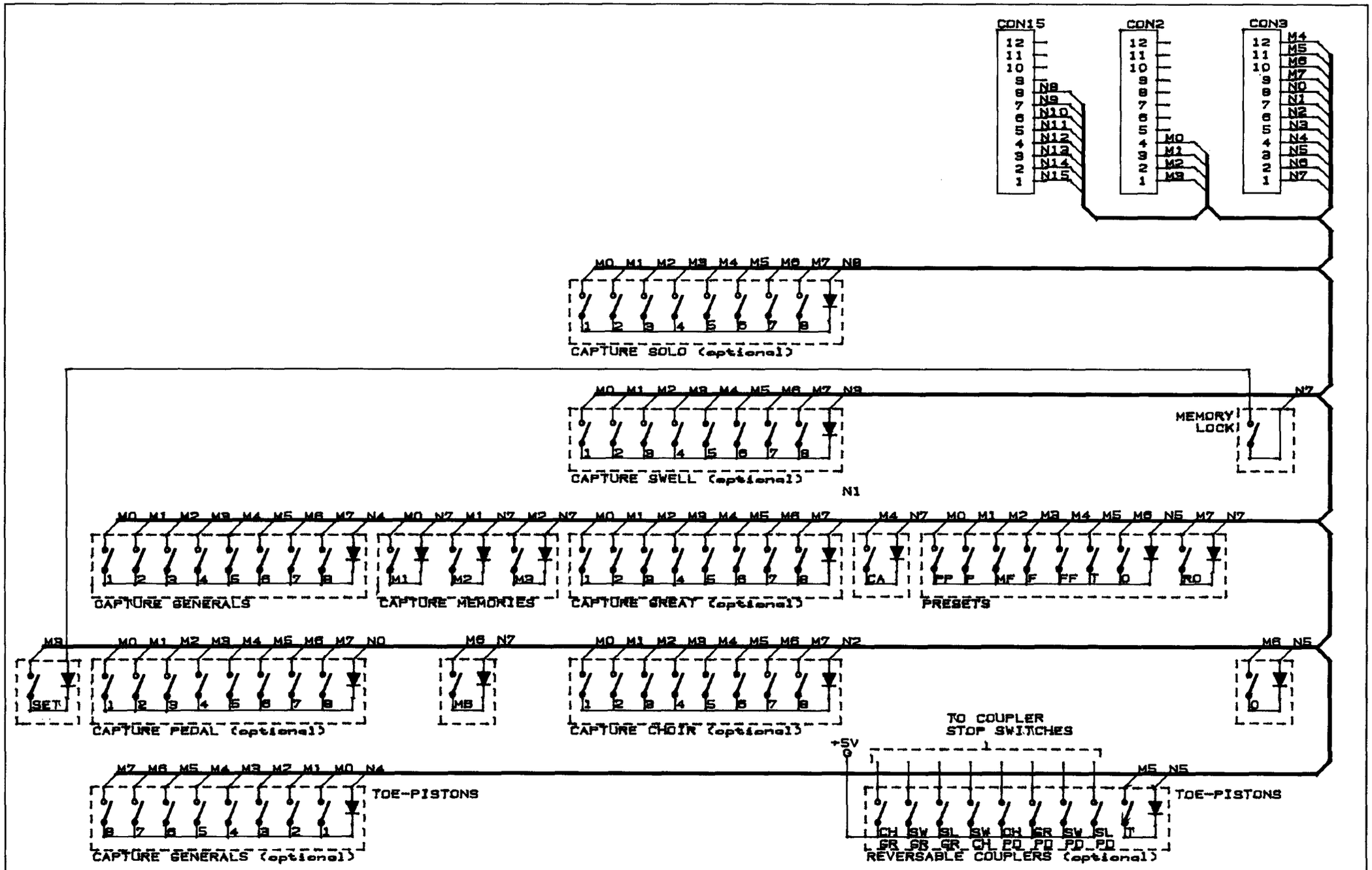

SCANNING	CAPTURE		
DESIGN	LAB		REV.
DRAWN	VERSCHOOR	30-05-91	
JOHANNUS 300-SERIES			PAGE 7

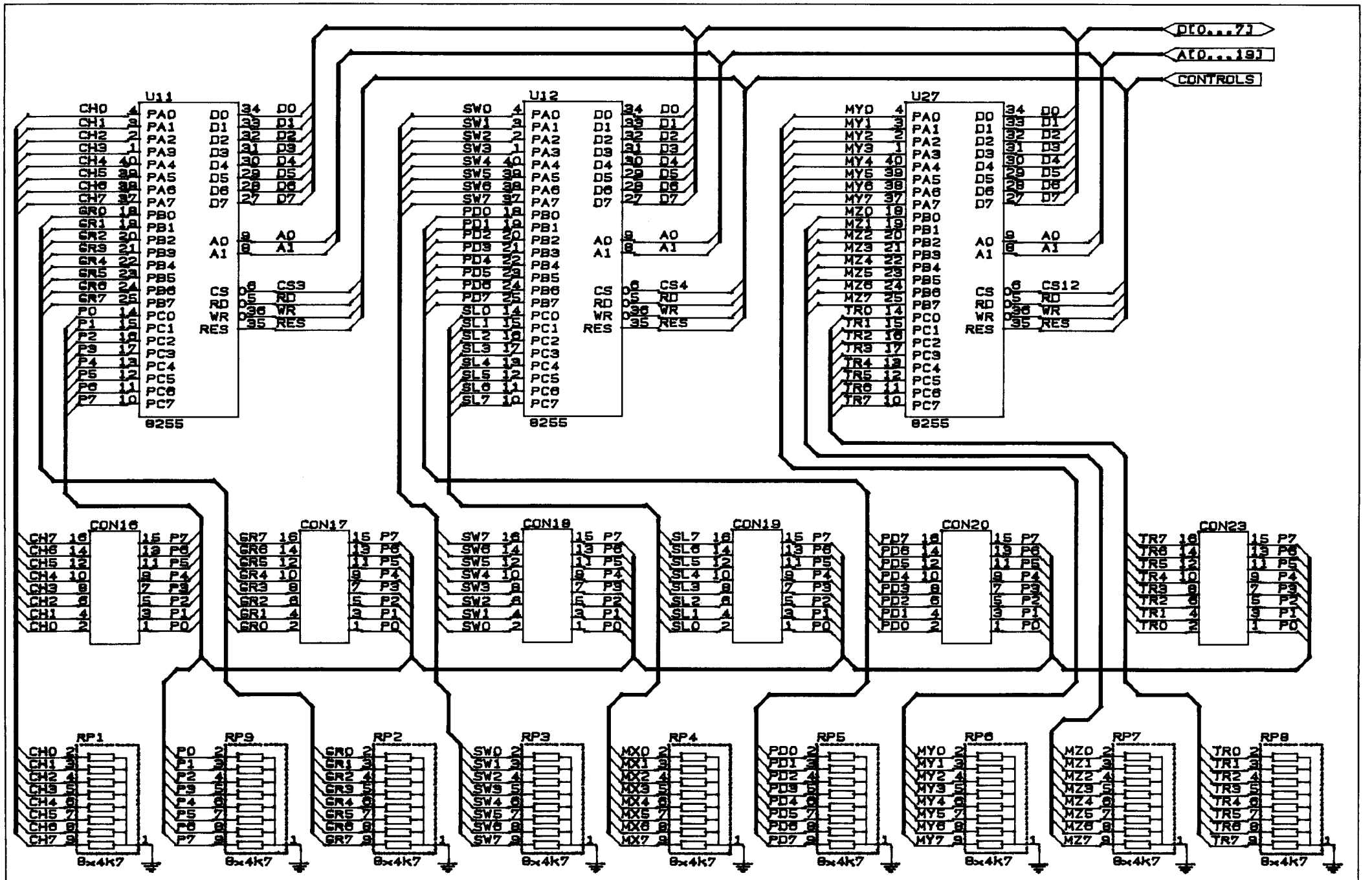

INPUT KEYING and TRANSPOSER (master proc.)

DESIGN	LAB		REV.
DRAWN	VERSCHOOR	07-08-91	
JOHANNUS 300-SERIES			PAGE 8

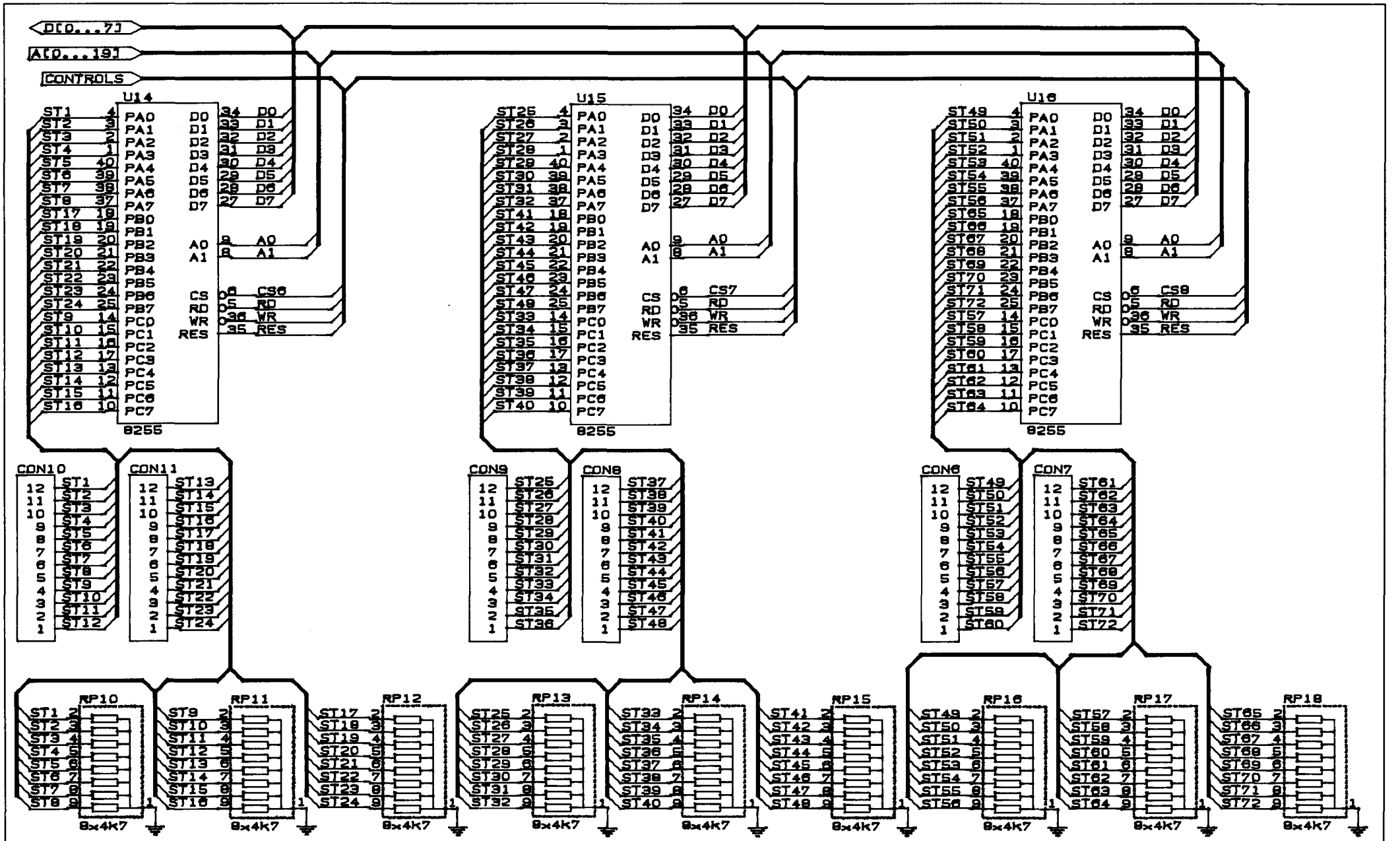

INPUT STOPS 1-72 (master proc.)

DESIGN	LAB		REV.
DRAWN	VERSCHOOR	07-06-91	
JOHANNUS 300-SERIES			PAGE 9

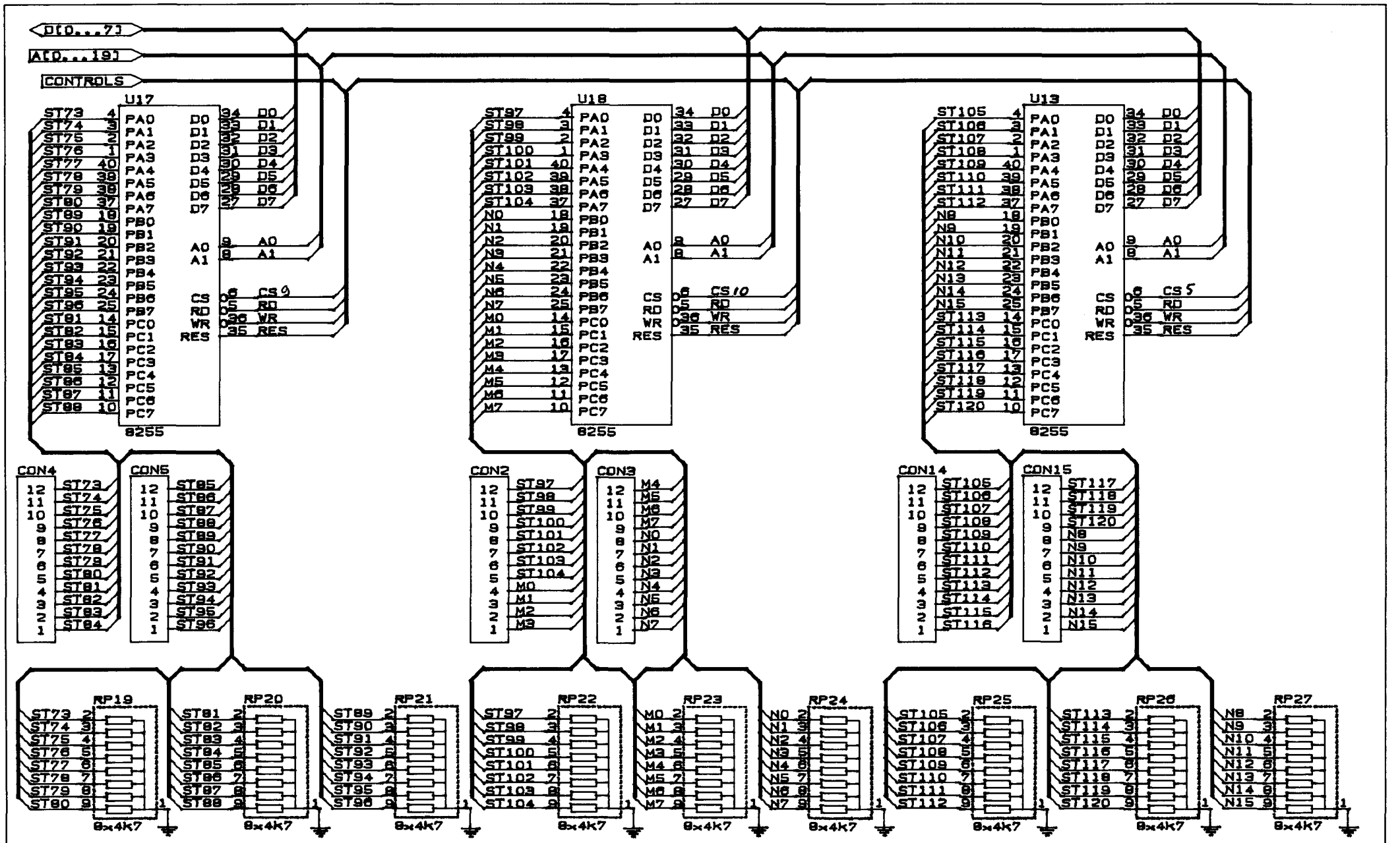

INPUT STOPS 73-120 and CAPTURE SYSTEM
(master proc.)

DESIGN	LAB		REV. 1
DRAWN	VERSCHOOR	10-06-91	
JOHANNUS 300-SERIES			PAGE 10

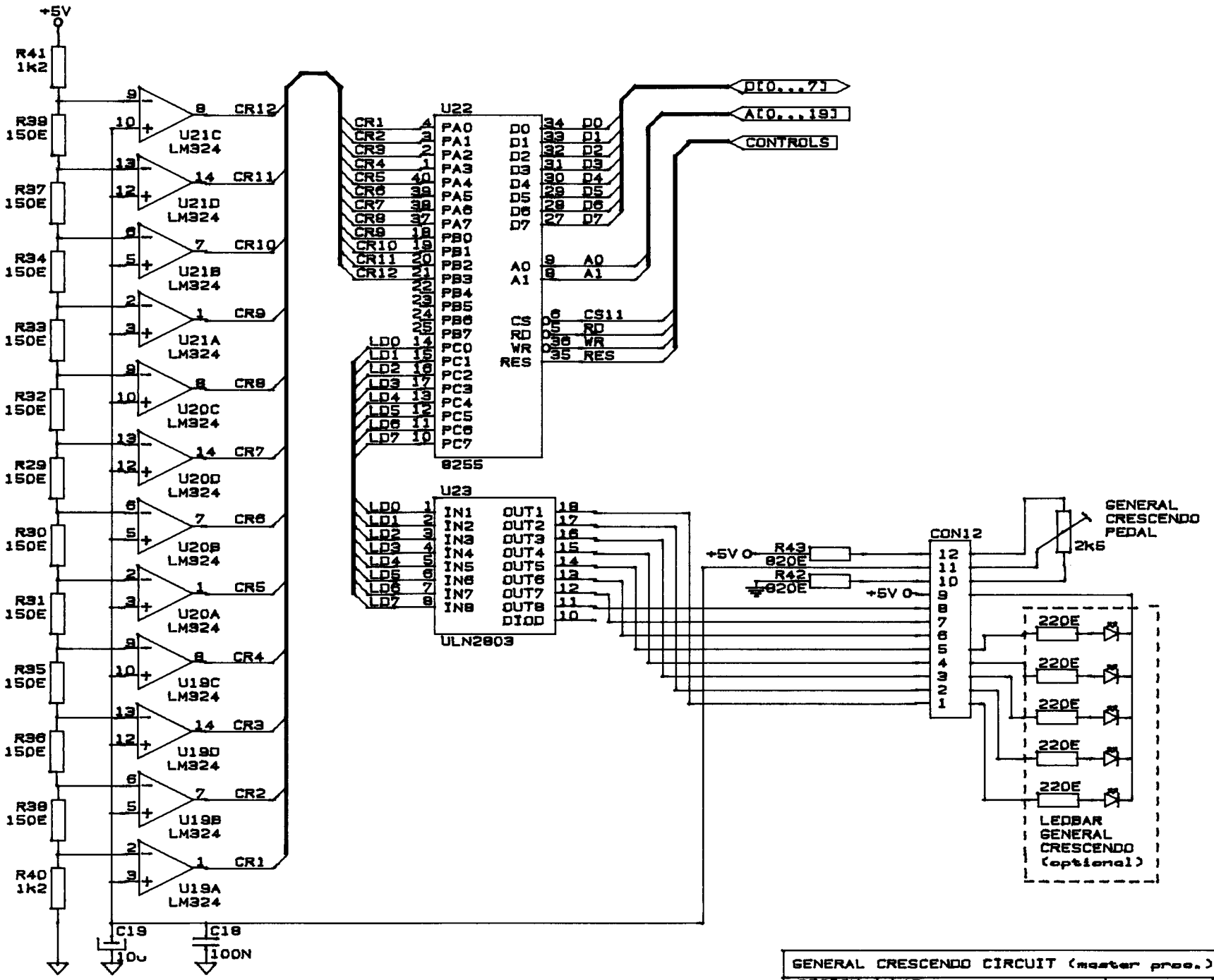

GENERAL CRESCENDO CIRCUIT (master proc.)			
DESIGN	LAB		REV.
DRAWN	VERSCHOOR	10-06-91	
JOHANNUS 300-SERIES			PAGE 11

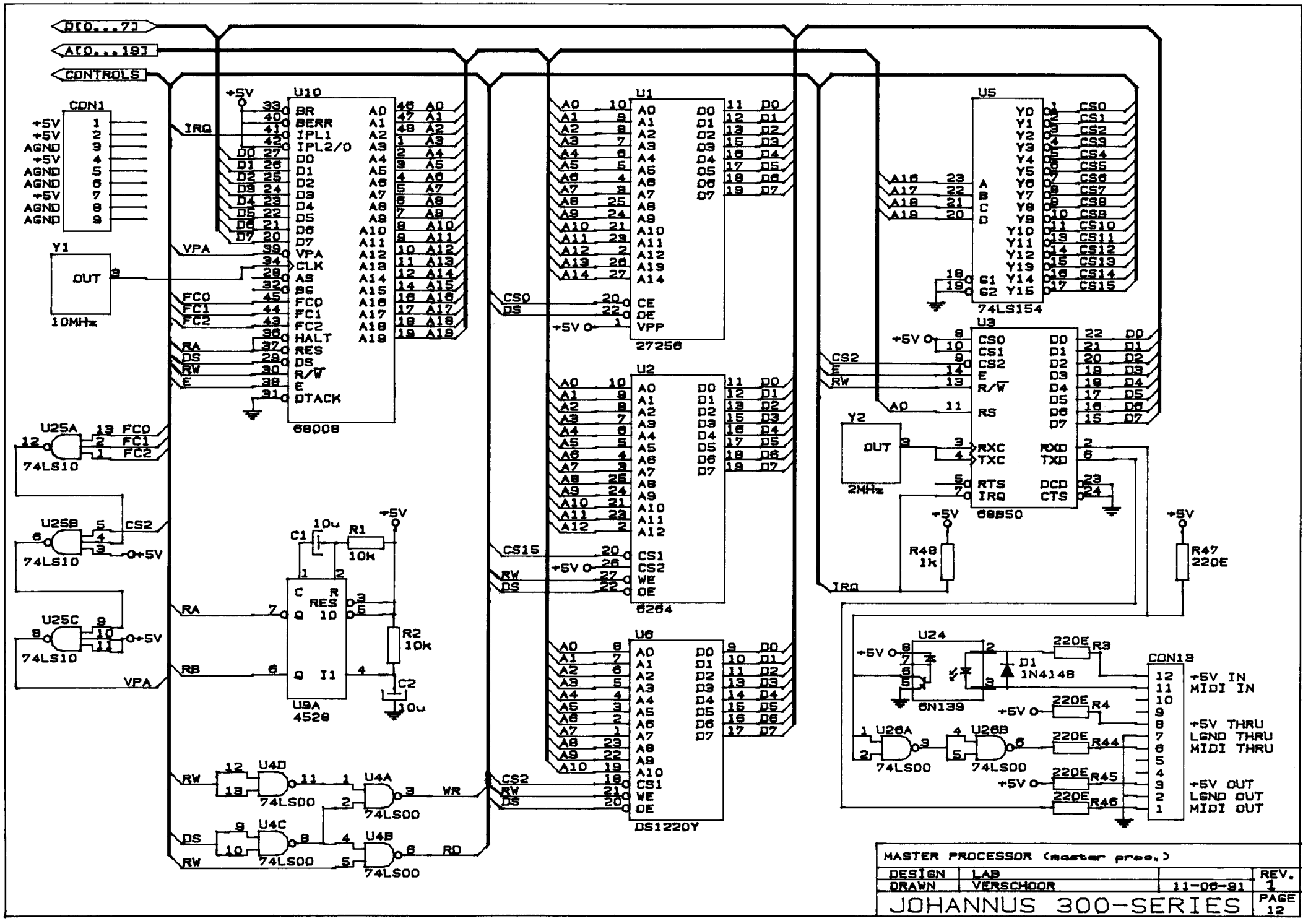
D[0...7]
A[0...19]
CONTROLS
CON1
+5V
AGND
Y1
OUT
10MHz
U10
68008
BR
BERR
IPL1
IPL2/O
D0
D1
D2
D3
D4
D5
D6
D7
VPA
CLK
AS
BG
FC0
FC1
FC2
HALT
RES
DS
R/W
E
DTACK
IRQ
RA
RW
U25A
74LS10
U25B
U25C
U9A
4528
C1
10u
R1
10k
R2
10k
C2
U4D
U4C
U4A
U4B
74LS00
WR
RD
U1
27256
U2
6264
U6
DS1220Y
CS0
CS15
CS2
U5
74LS154
U3
68B50
Y2
2MHz
R48
1k
R47
220E
U24
6N139
D1
1N4148
R3
R4
R44
R45
R46
U26A
U26B
CON13
+5V IN
MIDI IN
+5V THRU
LGND THRU
MIDI THRU
+5V OUT
LGND OUT
MIDI OUT
MASTER PROCESSOR (master proc.)
DESIGN LAB
DRAWN VERSCHOOR
11-06-91
REV. 1
JOHANNUS 300-SERIES
PAGE 12

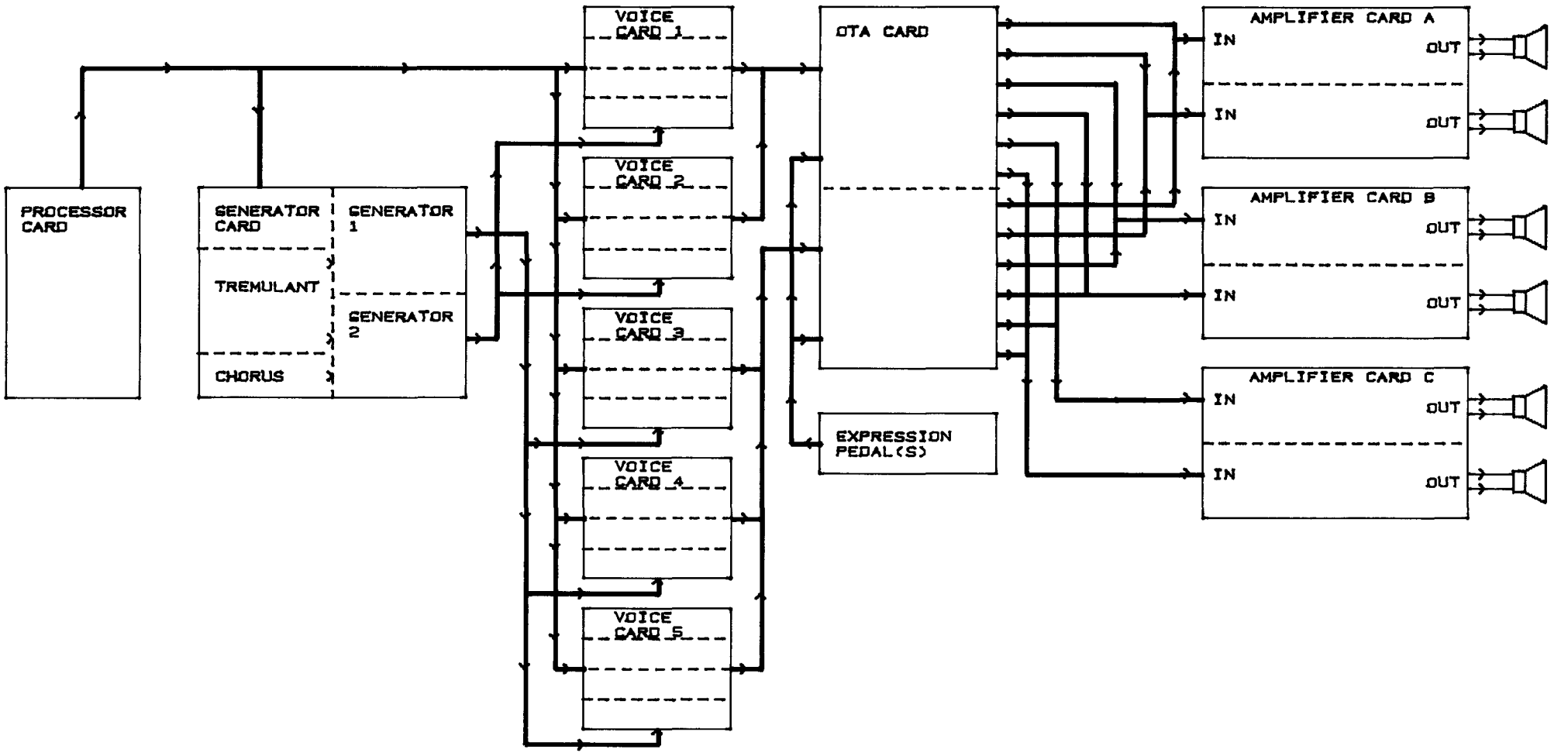

BLOCK DIAGRAM (1 RACK)			
DESIGN	LAB		REV.
DRAWN	VERSCHOOR	11-06-91	
JOHANNUS 300-SERIES			PAGE 13

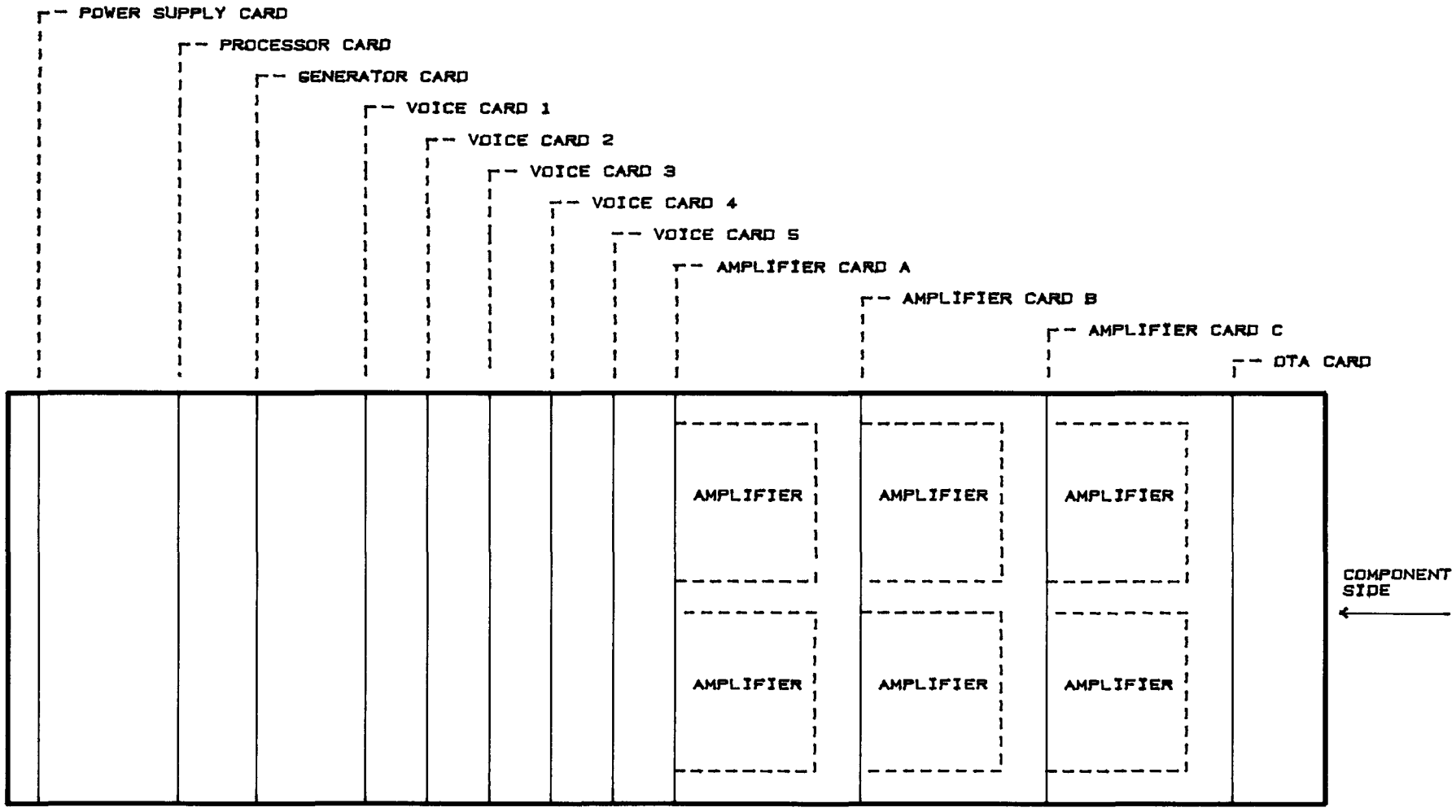

POSITION DIAGRAM CARDS (TOPVIEW)			
DESIGN	LAB		REV.
DRAWN	VERSCHOOR	11-06-91	
JOHANNUS 300-SERIES			PAGE 14

CON1 — POWER SUPPLY CARD

	1	
	2	
	3	
	4	
+12V	5	+12V
-12V	6	-12V
AGND	7	AGND
AGND	8	AGND
+35V	9	+35V
-35V	10	-35V
	11	
	12	
	13	
	14	
	15	
	16	
LGND	17	LGND
LGND	18	LGND
	19	
	20	
	21	
	22	
	23	
	24	
+5V	25	+5V
LGND	26	LGND
LGND	27	LGND
	28	
	29	
	30	
	31	
	32	

CON2 — PROCESSOR CARD

	1	
	2	
	3	
	4	
+12V	5	+12V
-12V	6	-12V
AGND	7	AGND
AGND	8	AGND
+35V	9	+35V
-35V	10	-35V
	11	
	12	
	13	
	14	
	15	
	16	
LGND	17	LGND
LGND	18	LGND
	19	
RES M114	20	EPROM CHOISE
B6	21	DATA STROBE
B4	22	B5
B2	23	B3
B0	24	B1
+5V	25	+5V
LGND	26	LGND
LGND	27	LGND
	28	
SEL7	29	SEL6
SEL5	30	SEL4
SEL3	31	SEL2
SEL1	32	SEL0

CON3 — GENERATOR CARD

	1	
	2	
	3	
	4	
+12V	5	+12V
-12V	6	-12V
AGND	7	AGND
AGND	8	AGND
+35V	9	+35V
-35V	10	-35V
	11	
	12	
	13	
	14	
	15	
GEN1	16	GEN1
LGND	17	LGND
LGND	18	LGND
GEN2	19	GEN2
RES M114	20	EPROM CHOISE
B6	21	DATA STROBE
B4	22	B5
B2	23	B3
B0	24	B1
+5V	25	+5V
LGND	26	LGND
LGND	27	LGND
	28	
SEL7	29	SEL6
SEL5	30	SEL4
SEL3	31	SEL2
SEL1	32	SEL0

CON4-5 — VOICE CARD 1-2

PRE-AMP1B	1	PRE-AMP2B
PRE-AMP3B	2	PRE-AMP4B
PRE-AMP5B	3	PRE-AMP6B
	4	
+12V	5	+12V
-12V	6	-12V
AGND	7	AGND
AGND	8	AGND
+35V	9	+35V
-35V	10	-35V
	11	
	12	
	13	
	14	
	15	
GEN1	16	GEN1
LGND	17	LGND
LGND	18	LGND
GEN2	19	GEN2
RES M114	20	EPROM CHOISE
B6	21	DATA STROBE
B4	22	B5
B2	23	B3
B0	24	B1
+5V	25	+5V
LGND	26	LGND
LGND	27	LGND
	28	
SEL7	29	SEL6
SEL5	30	SEL4
SEL3	31	SEL2
SEL1	32	SEL0

CON6-8 — VOICE CARD 3-5

PRE-AMP1A	1	PRE-AMP2A
PRE-AMP3A	2	PRE-AMP4A
PRE-AMP5A	3	PRE-AMP6A
	4	
+12V	5	+12V
-12V	6	-12V
AGND	7	AGND
AGND	8	AGND
+35V	9	+35V
-35V	10	-35V
	11	
	12	
	13	
	14	
	15	
GEN1	16	GEN1
LGND	17	LGND
LGND	18	LGND
GEN2	19	GEN2
RES M114	20	EPROM CHOISE
B6	21	DATA STROBE
B4	22	B5
B2	23	B3
B0	24	B1
+5V	25	+5V
LGND	26	LGND
LGND	27	LGND
	28	
SEL7	29	SEL6
SEL5	30	SEL4
SEL3	31	SEL2
SEL1	32	SEL0

CON9-11 — AMPLIFIER CARDS

POWER-AMP1	1	POWER-AMP2
POWER-AMP3	2	POWER-AMP4
TO ECHO	3	FROM ECHO B
	4	FROM ECHO A
+12V	5	+12V
-12V	6	-12V
AGND	7	AGND
AGND	8	AGND
+35V	9	+35V
-35V	10	-35V
VOLUME	11	MUTE
PHONES	12	
	13	
	14	
	15	
	16	
LGND	17	LGND
LGND	18	LGND
	19	
	20	
	21	
	22	
	23	
	24	
+5V	25	+5V
LGND	26	LGND
LGND	27	LGND
	28	
	29	
	30	
	31	
	32	

CON12 — OTA CARD

POWER-AMP1	1	POWER-AMP2
POWER-AMP3	2	POWER-AMP4
POWER-AMP5	3	POWER-AMP6
FROM ECHO A	4	FROM ECHO B
+12V	5	+12V
-12V	6	-12V
AGND	7	AGND
AGND	8	AGND
+35V	9	+35V
-35V	10	-35V
VOLUME	11	MUTE
PHONES	12	TO ECHO
PRE-AMP5A	13	PRE-AMP5A
PRE-AMP6A	14	PRE-AMP6A
PRE-AMP3A	15	PRE-AMP3A
PRE-AMP4A	16	PRE-AMP4A
PRE-AMP1A	17	PRE-AMP1A
PRE-AMP2A	18	PRE-AMP2A
PRE-AMP5B	19	PRE-AMP5B
PRE-AMP6B	20	PRE-AMP6B
PRE-AMP3B	21	PRE-AMP3B
PRE-AMP4B	22	PRE-AMP4B
PRE-AMP1B	23	PRE-AMP1B
PRE-AMP1A	24	PRE-AMP1A
+5V	25	+5V
LGND	26	LGND
LGND	27	LGND
	28	
	29	
	30	
	31	
	32	

PINNING BUS CARD CONNECTORS (RACKS)			
DESIGN	LAB		REV.
DRAWN	VERSCHOOR	11-06-91	
JOHANNUS 300-SERIES			PAGE 15

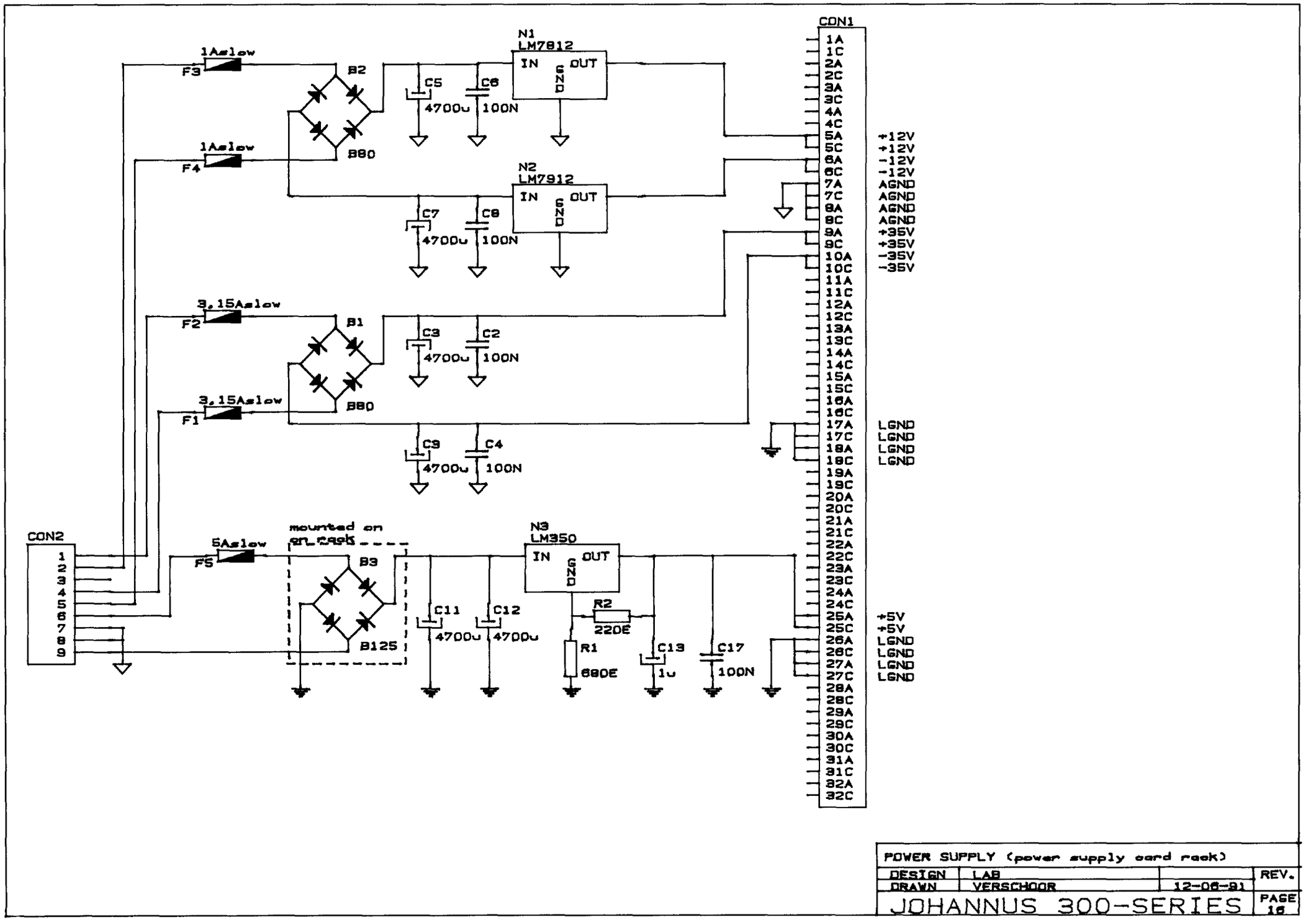

POWER SUPPLY (power supply card rack)

DESIGN	LAB		REV.
DRAWN	VERSCHOOR	12-06-91	
JOHANNUS 300-SERIES			PAGE 16

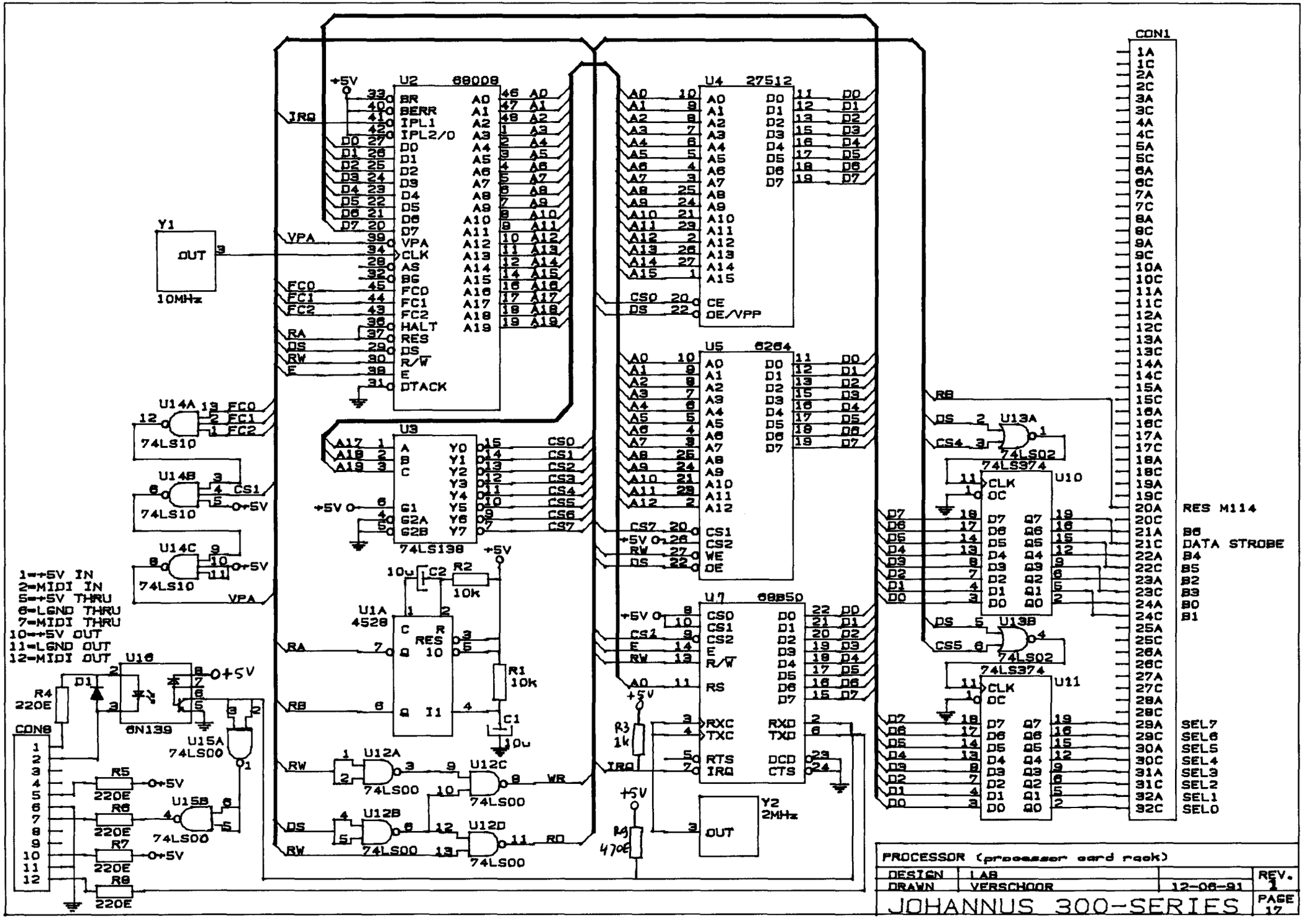
U2 68008
U4 27512
U5 6264
U7 68B50
U3 74LS138
U1A 4528
U10 74LS374
U11 74LS374
U13A 74LS02
U13B 74LS02
U14A 74LS10
U14B 74LS10
U14C 74LS10
U15A 74LS00
U15B 74LS00
U16 6N139
U12A 74LS00
U12B 74LS00
U12C 74LS00
U12D 74LS00
Y1 10MHz
Y2 2MHz
CON1
CON8
1=+5V IN
2=MIDI IN
5=+5V THRU
6=GND THRU
7=MIDI THRU
10=+5V OUT
11=GND OUT
12=MIDI OUT
RES M114
B6
DATA STROBE
B4
B5
B2
B3
B0
B1
SEL7
SEL6
SEL5
SEL4
SEL3
SEL2
SEL1
SEL0
PROCESSOR (processor card rack)
DESIGN LAB
DRAWN VERSCHOOR 12-06-91
REV. 1
JOHANNUS 300-SERIES
PAGE 17

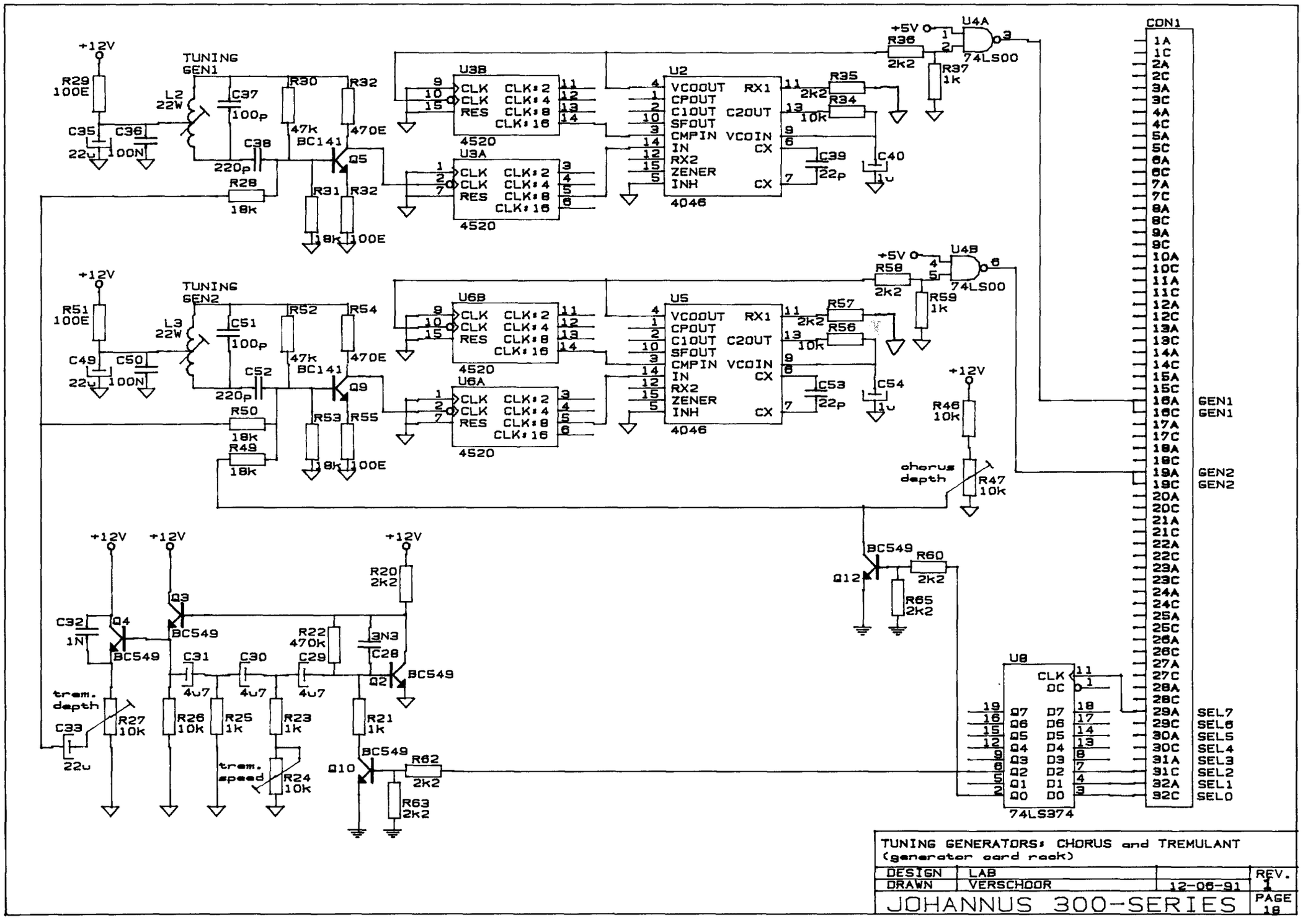
TUNING GENERATORS: CHORUS and TREMULANT
(generator card rack)
DESIGN LAB
DRAWN VERSCHOOR 12-06-91
REV. 1
JOHANNUS 300-SERIES
PAGE 18
TUNING GEN1
TUNING GEN2
U3B 4520
U3A 4520
U6B 4520
U6A 4520
U2 4046
U5 4046
U4A 74LS00
U4B 74LS00
U8 74LS374
CON1
GEN1
GEN2
SEL7
SEL6
SEL5
SEL4
SEL3
SEL2
SEL1
SEL0
chorus depth
trem. depth
trem. speed

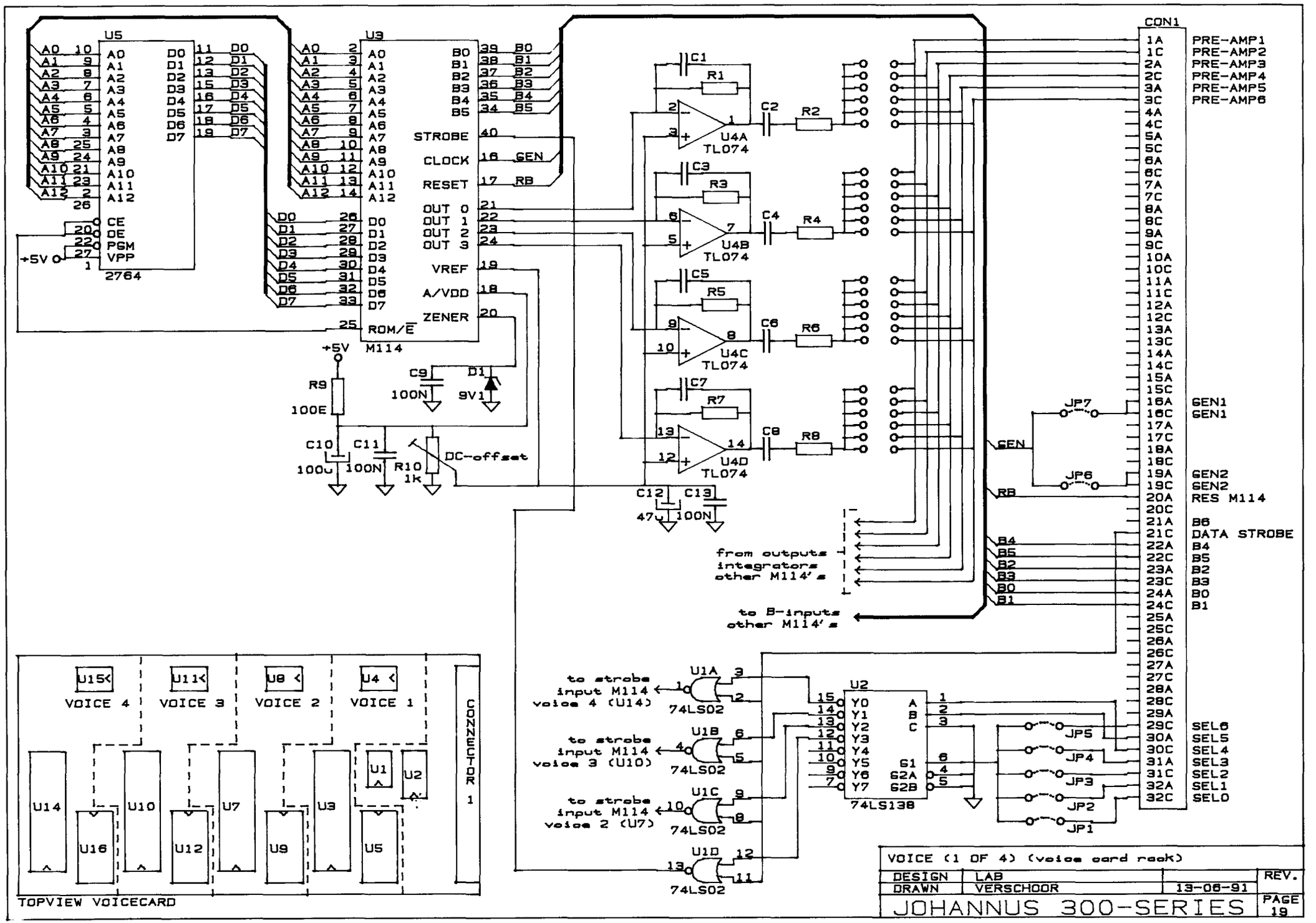
U5
2764
U3
M114
STROBE
CLOCK
RESET
OUT 0
OUT 1
OUT 2
OUT 3
VREF
A/VDD
ZENER
ROM/E
GEN
RB
+5V
R9
100E
C9
100N
D1
9V1
C10
100u
C11
100N
R10
1k
DC-offset
C12
47u
C13
100N
U4A
TL074
U4B
TL074
U4C
TL074
U4D
TL074
from outputs
integrators
other M114's
to B-inputs
other M114's
CON1
PRE-AMP1
PRE-AMP2
PRE-AMP3
PRE-AMP4
PRE-AMP5
PRE-AMP6
GEN1
GEN1
GEN2
GEN2
RES M114
B6
DATA STROBE
B4
B5
B2
B3
B0
B1
SEL6
SEL5
SEL4
SEL3
SEL2
SEL1
SEL0
JP7
JP6
JP5
JP4
JP3
JP2
JP1
U2
74LS138
U1A
U1B
U1C
U1D
74LS02
to strobe
input M114
voice 4 (U14)
to strobe
input M114
voice 3 (U10)
to strobe
input M114
voice 2 (U7)
VOICE 4
VOICE 3
VOICE 2
VOICE 1
CONNECTOR 1
TOPVIEW VOICECARD
VOICE (1 OF 4) (voice card rack)
DESIGN
LAB
DRAWN
VERSCHOOR
13-06-91
REV.
JOHANNUS 300-SERIES
PAGE 19

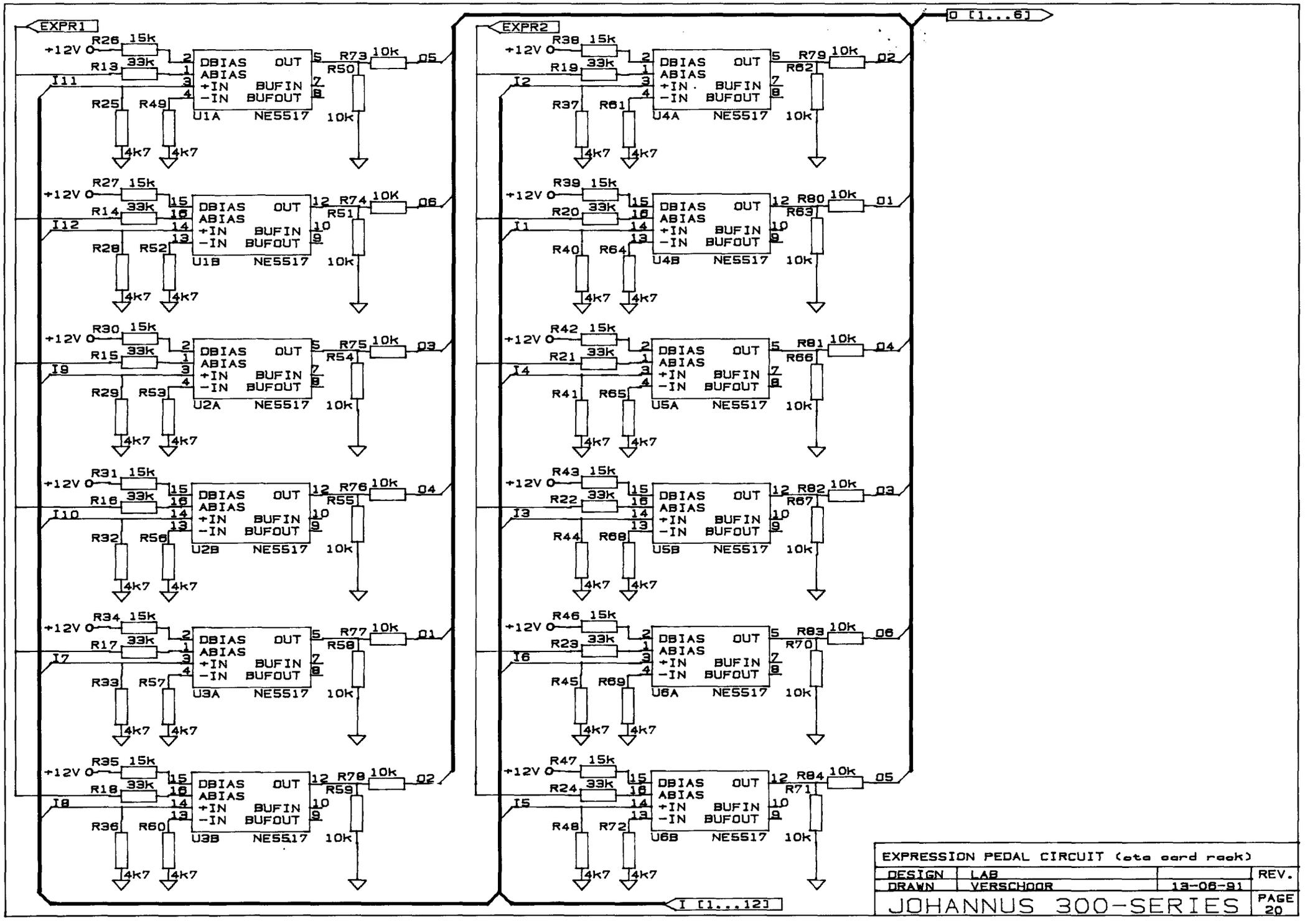

EXPRESSION PEDAL CIRCUIT (ata card rack)			
DESIGN	LAB		REV.
DRAWN	VERSCHOOR	13-06-91	
JOHANNUS 300-SERIES			PAGE 20

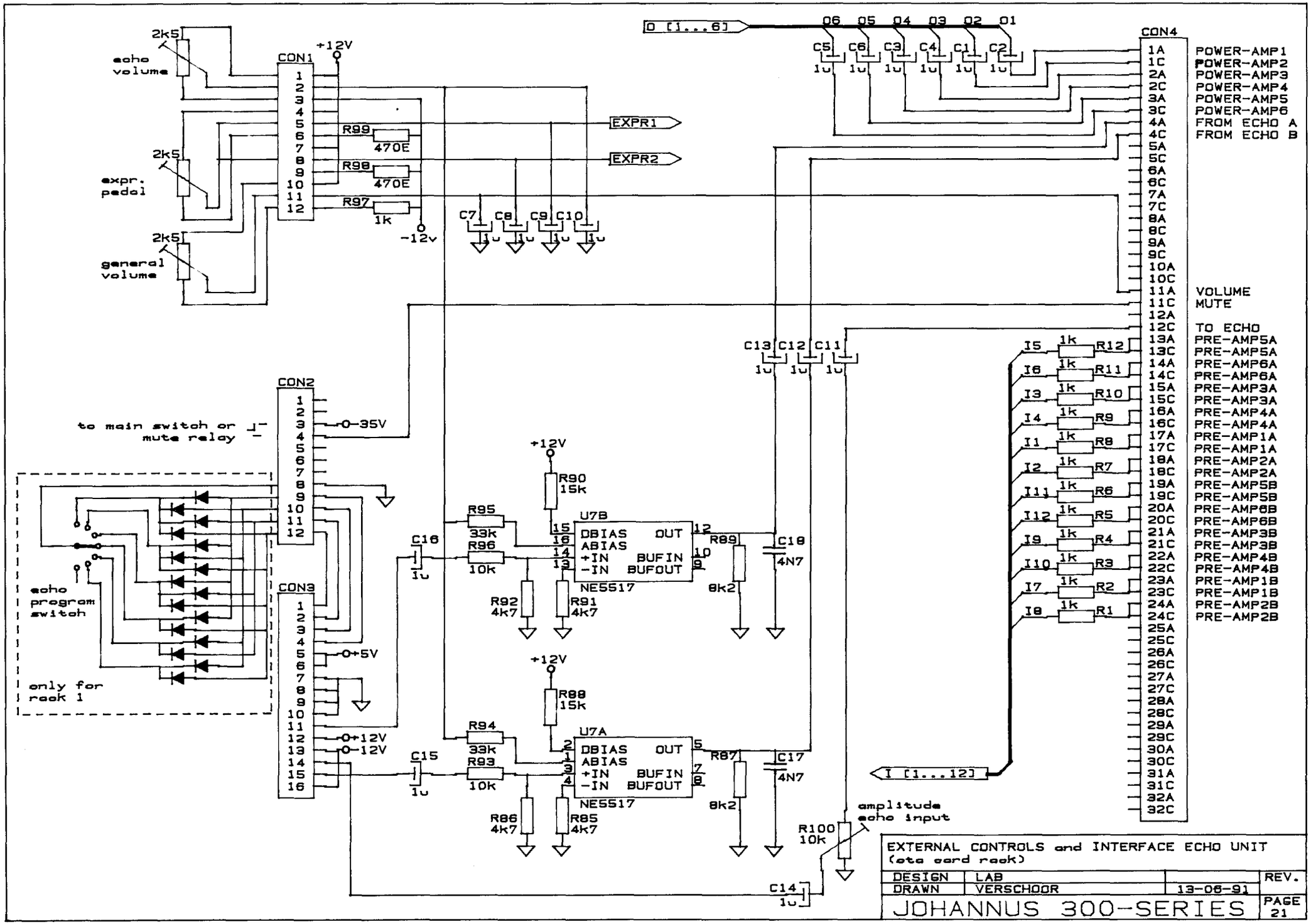
echo volume
2k5
expr. pedal
general volume
CON1
+12V
-12v
R99 470E
R98 470E
R97 1k
EXPR1
EXPR2
C7 C8 C9 C10 1u
O [1...6]
O6 O5 O4 O3 O2 O1
C5 C6 C3 C4 C1 C2 1u
CON4
POWER-AMP1
POWER-AMP2
POWER-AMP3
POWER-AMP4
POWER-AMP5
POWER-AMP6
FROM ECHO A
FROM ECHO B
VOLUME
MUTE
TO ECHO
PRE-AMP5A
PRE-AMP5A
PRE-AMP6A
PRE-AMP6A
PRE-AMP3A
PRE-AMP3A
PRE-AMP4A
PRE-AMP4A
PRE-AMP1A
PRE-AMP1A
PRE-AMP2A
PRE-AMP2A
PRE-AMP5B
PRE-AMP5B
PRE-AMP6B
PRE-AMP6B
PRE-AMP3B
PRE-AMP3B
PRE-AMP4B
PRE-AMP4B
PRE-AMP1B
PRE-AMP1B
PRE-AMP2B
PRE-AMP2B
C13 C12 C11 1u
I5 I6 I3 I4 I1 I2 I11 I12 I9 I10 I7 I8
R12 R11 R10 R9 R8 R7 R6 R5 R4 R3 R2 R1 1k
CON2
to main switch or mute relay
-35V
CON3
+5V
+12V
-12V
echo program switch
only for rack 1
+12V
R90 15k
R95 33k
R96 10k
C16 1u
U7B
DBIAS
ABIAS
+IN
-IN
OUT
BUFIN
BUFOUT
NE5517
R92 4k7
R91 4k7
R89 8k2
C18 4N7
+12V
R88 15k
R94 33k
R93 10k
C15 1u
U7A
DBIAS
ABIAS
+IN
-IN
OUT
BUFIN
BUFOUT
NE5517
R86 4k7
R85 4k7
R87 8k2
C17 4N7
I [1...12]
amplitude echo input
R100 10k
C14 1u
EXTERNAL CONTROLS and INTERFACE ECHO UNIT
(ots card rack)
DESIGN LAB
DRAWN VERSCHOOR 13-06-91
REV.
JOHANNUS 300-SERIES
PAGE 21

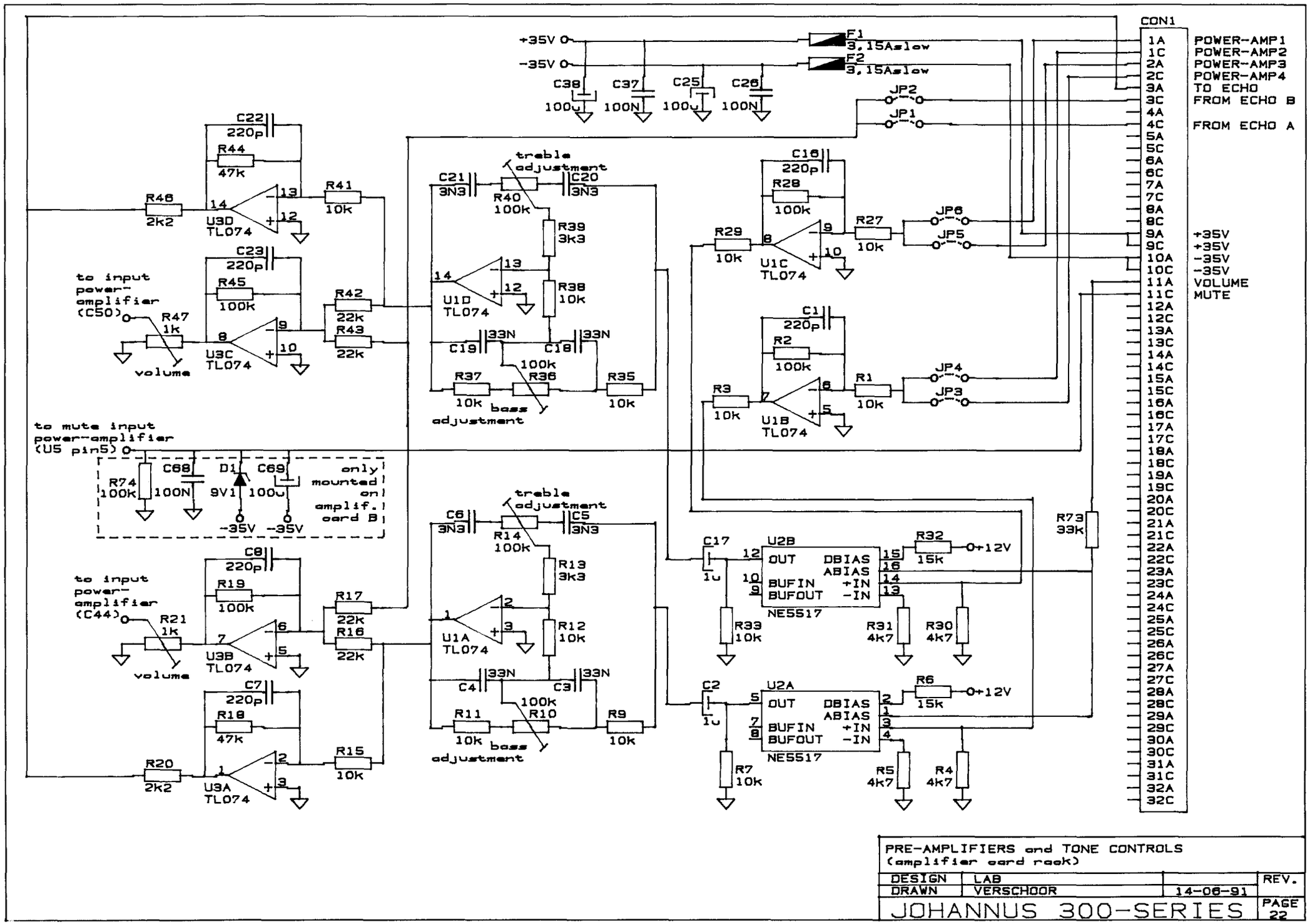

PRE-AMPLIFIERS and TONE CONTROLS
(amplifier card rack)

DESIGN	LAB		REV.
DRAWN	VERSCHOOR	14-06-91	

JOHANNUS 300-SERIES

PAGE 22

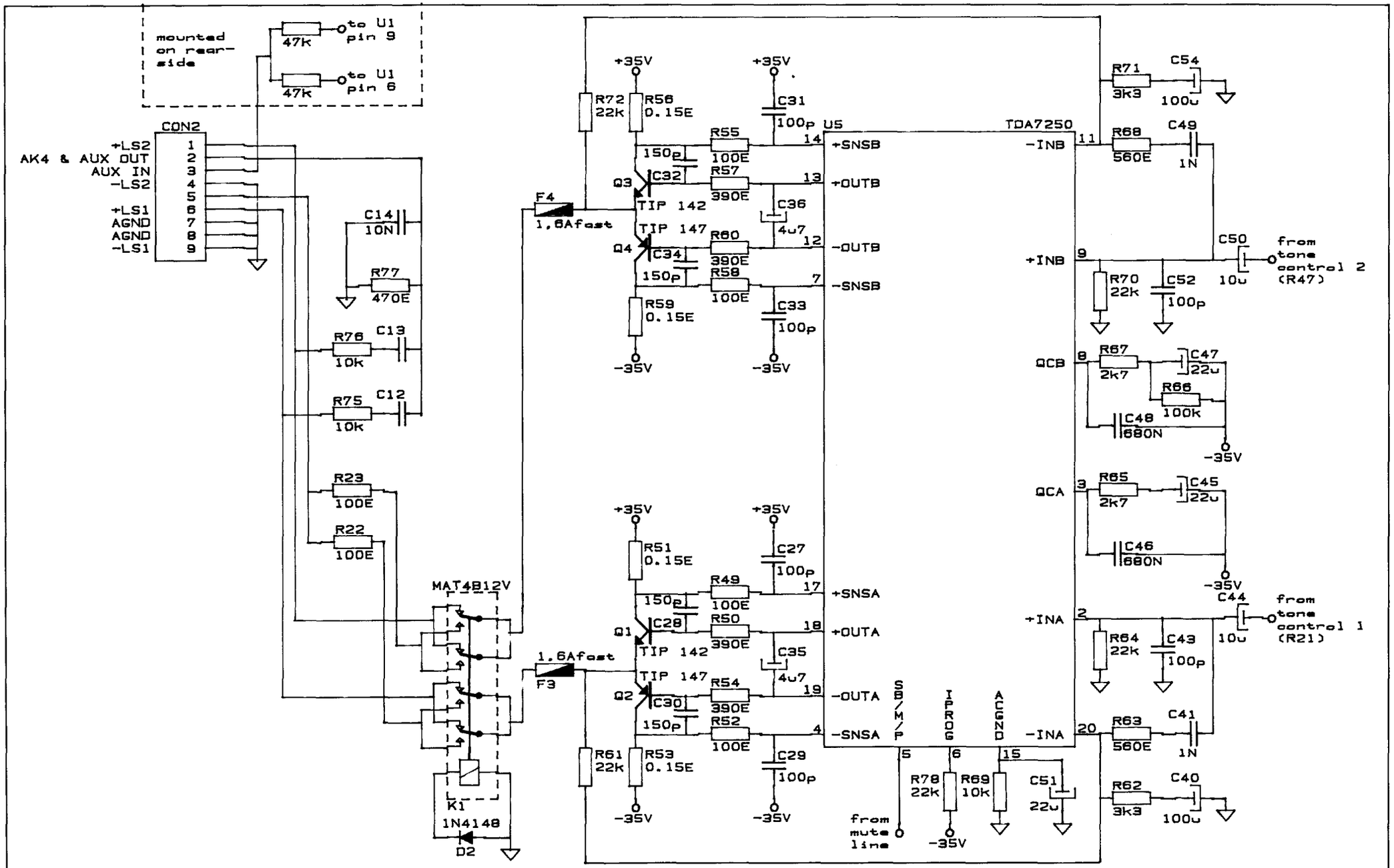

POWER AMPLIFIER (amplifier card A & B rack)			
DESIGN	LAB		REV.
DRAWN	VERSCHOOR	17-06-91	
JOHANNUS 300-SERIES			PAGE 23

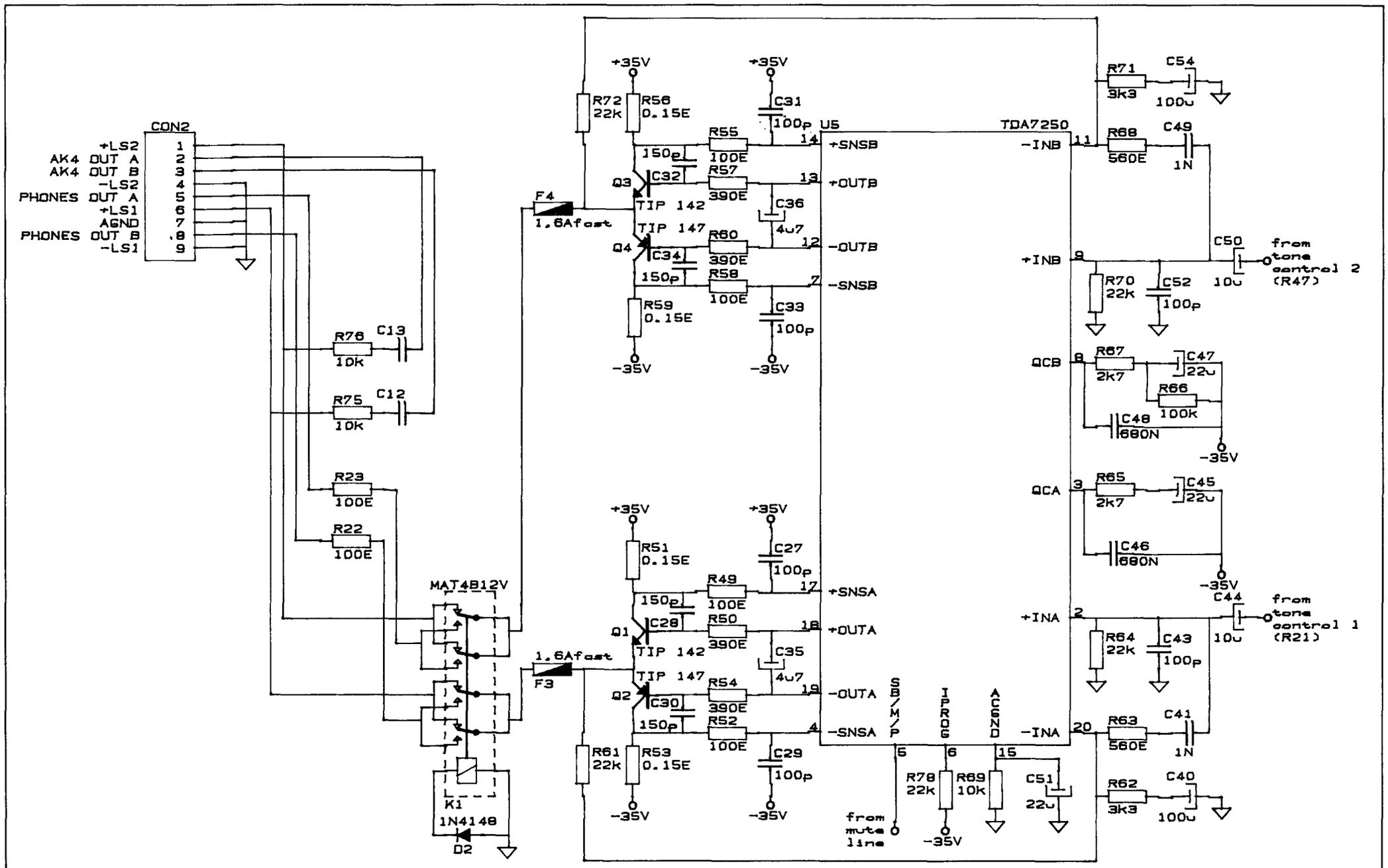

POWER AMPLIFIER (amplifier card C rack)			
DESIGN	LAB		REV.
DRAWN	VERSCHOOR	17-08-91	
JOHANNUS 300-SERIES			PAGE 24

1. NOT CONNECTED
2. NOT CONNECTED
3. NOT CONNECTED
4. +5V MIDI IN
5. MIDI IN

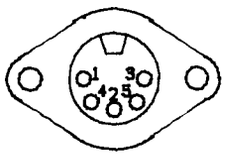

MIDI IN

1. NOT CONNECTED
2. NOT CONNECTED
3. NOT CONNECTED
4. +5V MIDI THRU
5. MIDI THRU

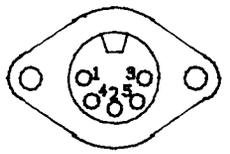

MIDI THRU

1. NOT CONNECTED
2. NOT CONNECTED
3. NOT CONNECTED
4. +5V MIDI OUT
5. MIDI OUT

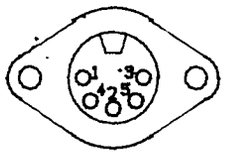

MIDI OUT

1. AK-4 OUT CHANNEL A
2. GROUND
3. NOT CONNECTED
4. AK-4 OUT CHANNEL B
5. NOT CONNECTED

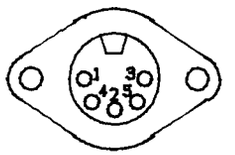

AK-4 OUT

1. AUX OUT CHANNEL A
2. GROUND
3. AUX IN CHANNEL A
4. AUX OUT CHANNEL B
5. AUX IN CHANNEL B

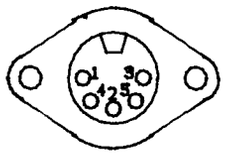

AUX IN/OUT

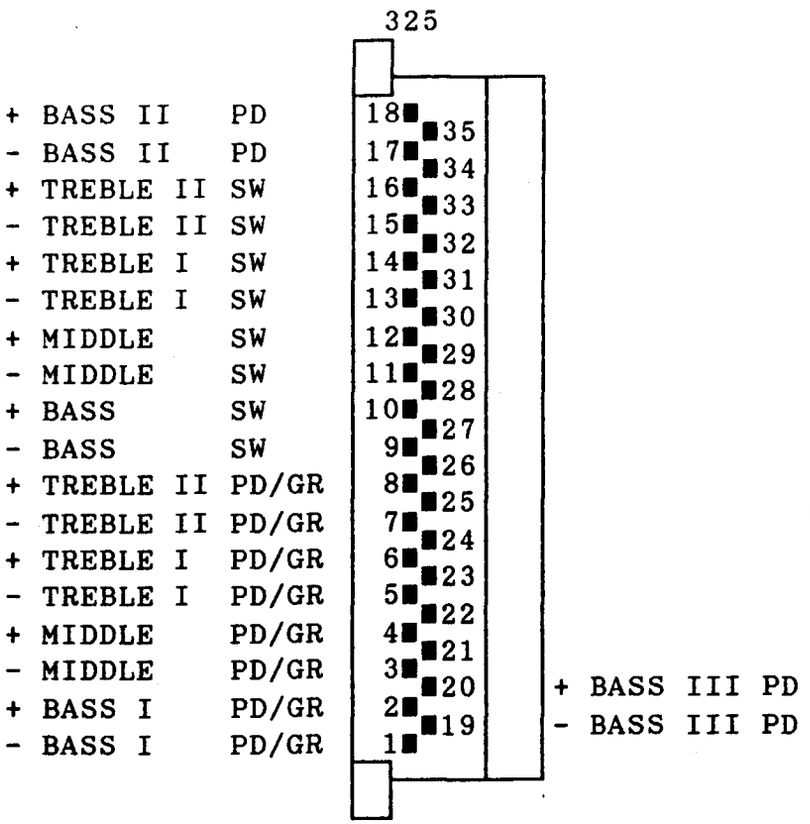

EXTERNAL CONNECTIONS (mounted on the rearside of the organ) SOLDERINGSIDEVIEW

DESIGN	LAB		REV.
DRAWN	VERSCHOOR	17-06-91	
JOHANNUS 300-SERIES			PAGE 25

1. NOT CONNECTED
2. NOT CONNECTED
3. NOT CONNECTED
4. +5V MIDI IN
5. MIDI IN

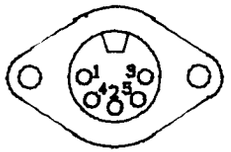

MIDI IN

1. NOT CONNECTED
2. NOT CONNECTED
3. NOT CONNECTED
4. +5V MIDI THRU
5. MIDI THRU

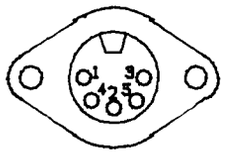

MIDI THRU

1. NOT CONNECTED
2. NOT CONNECTED
3. NOT CONNECTED
4. +5V MIDI OUT
5. MIDI OUT

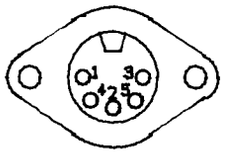

MIDI OUT

1. AK-4 OUT CHANNEL A
2. GROUND
3. NOT CONNECTED
4. AK-4 OUT CHANNEL B
5. NOT CONNECTED

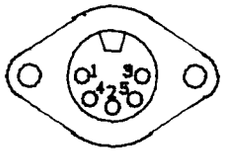

AK-4 OUT

1. AUX OUT CHANNEL A
2. GROUND
3. AUX IN CHANNEL A
4. AUX OUT CHANNEL B
5. AUX IN CHANNEL B

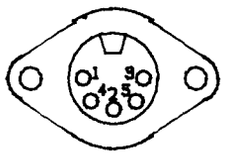

AUX IN/OUT

335

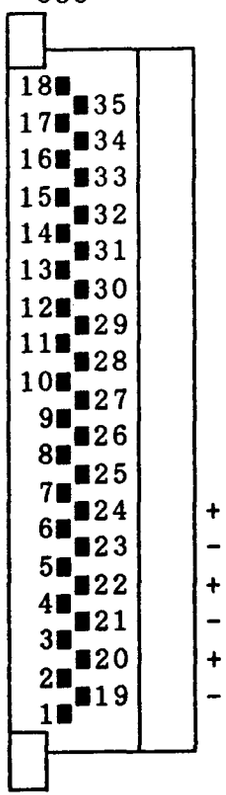

+ BASS	SW	
- BASS	SW	
+ TREBLE II	GR	
- TREBLE II	GR	
+ TREBLE I	GR	
- TREBLE I	GR	
+ MIDDLE	GR	
- MIDDLE	GR	
+ BASS	GR	
- BASS	GR	
+ TREBLE II	PD	
- TREBLE II	PD	
+ TREBLE I	PD	
- TREBLE I	PD	
+ MIDDLE	PD	
- MIDDLE	PD	
+ BASS	PD	
- BASS	PD	

+ TREBLE II	SW
- TREBLE II	SW
+ TREBLE I	SW
- TREBLE I	SW
+ MIDDLE	SW
- MIDDLE	SW

EXTERNAL CONNECTIONS (mounted on the rearside of the organ) SOLDERINGSIDEVIEW

DESIGN	LAB		REV.
DRAWN	VERSCHOOR	17-06-91	
JOHANNUS 300-SERIES			PAGE 25

1. NOT CONNECTED
2. NOT CONNECTED
3. NOT CONNECTED
4. +5V MIDI IN
5. MIDI IN

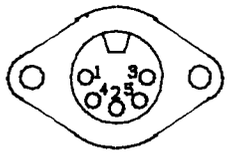

MIDI IN

1. NOT CONNECTED
2. NOT CONNECTED
3. NOT CONNECTED
4. +5V MIDI THRU
5. MIDI THRU

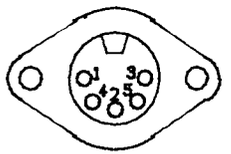

MIDI THRU

1. NOT CONNECTED
2. NOT CONNECTED
3. NOT CONNECTED
4. +5V MIDI OUT
5. MIDI OUT

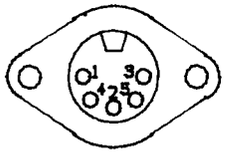

MIDI OUT

1. AK-4 OUT CHANNEL A
2. GROUND
3. NOT CONNECTED
4. AK-4 OUT CHANNEL B
5. NOT CONNECTED

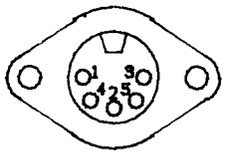

AK-4 OUT

1. AUX OUT CHANNEL A
2. GROUND
3. AUX IN CHANNEL A
4. AUX OUT CHANNEL B
5. AUX IN CHANNEL B

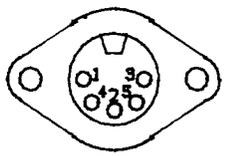

AUX IN/OUT

355

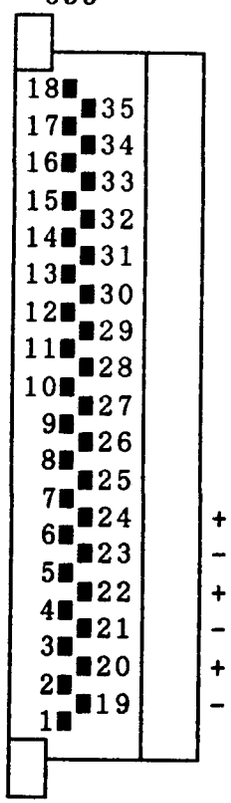

+	BASS	SW
-	BASS	SW
+	TREBLE II	GR
-	TREBLE II	GR
+	TREBLE I	GR
-	TREBLE I	GR
+	MIDDLE	GR
-	MIDDLE	GR
+	BASS	GR
-	BASS	GR
+	TREBLE II	PD/CH
-	TREBLE II	PD/CH
+	TREBLE I	PD/CH
-	TREBLE I	PD/CH
+	MIDDLE	PD/CH
-	MIDDLE	PD/CH
+	BASS	PD/CH
-	BASS	PD/CH

+	TREBLE II	SW
-	TREBLE II	SW
+	TREBLE I	SW
-	TREBLE I	SW
+	MIDDLE	SW
-	MIDDLE	SW

EXTERNAL CONNECTIONS (mounted on the rearside of the organ) SOLDERINGSIDEVIEW

DESIGN	LAB		REV.
DRAWN	VERSCHOOR	17-06-91	
JOHANNUS 300-SERIES			PAGE 25

1. NOT CONNECTED
2. NOT CONNECTED
3. NOT CONNECTED
4. +5V MIDI IN
5. MIDI IN

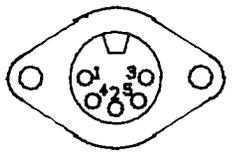

MIDI IN

1. NOT CONNECTED
2. NOT CONNECTED
3. NOT CONNECTED
4. +5V MIDI THRU
5. MIDI THRU

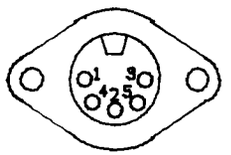

MIDI THRU

1. NOT CONNECTED
2. NOT CONNECTED
3. NOT CONNECTED
4. +5V MIDI OUT
5. MIDI OUT

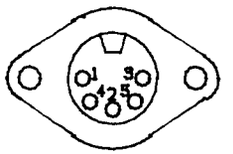

MIDI OUT

1. AK-4 OUT CHANNEL A
2. GROUND
3. NOT CONNECTED
4. AK-4 OUT CHANNEL B
5. NOT CONNECTED

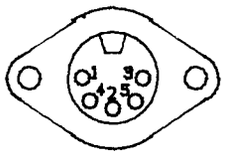

AK-4 OUT

1. AUX OUT CHANNEL A
2. GROUND
3. AUX IN CHANNEL A
4. AUX OUT CHANNEL B
5. AUX IN CHANNEL B

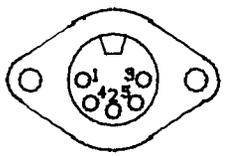

AUX IN/OUT

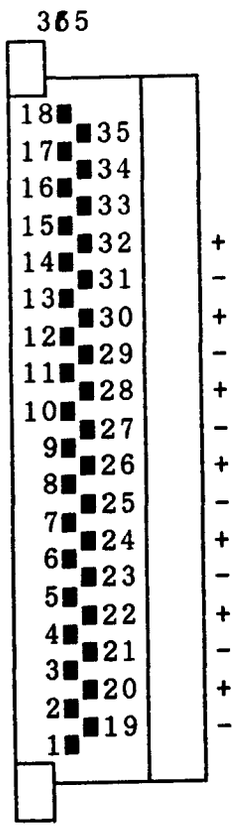

+	BASS	CH
-	BASS	CH
+	TREBLE II	GR
-	TREBLE II	GR
+	TREBLE I	GR
-	TREBLE I	GR
+	MIDDLE	GR
-	MIDDLE	GR
+	BASS	GR
-	BASS	GR
+	TREBLE II	PD
-	TREBLE II	PD
+	TREBLE I	PD
-	TREBLE I	PD
+	MIDDLE	PD
-	MIDDLE	PD
+	BASS	PD
-	BASS	PD

+	TREBLE II	SW
-	TREBLE II	SW
+	TREBLE I	SW
-	TREBLE I	SW
+	MIDDLE	SW
-	MIDDLE	SW
+	BASS	SW
-	BASS	SW
+	TREBLE II	CH
-	TREBLE II	CH
+	TREBLE I	CH
-	TREBLE I	CH
+	MIDDLE	CH
-	MIDDLE	CH

EXTERNAL CONNECTIONS (mounted on the rearside of the organ) SOLDERINGSIDEVIEW

DESIGN	LAB		REV.
DRAWN	VERSCHOOR	17-08-91	
JOHANNUS 300-SERIES			PAGE 25

T CONNECTED
T CONNECTED
T CONNECTED
V MIDI IN
DI IN

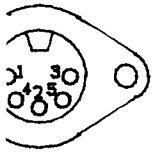

MIDI IN

1. NOT CONNECTED
2. NOT CONNECTED
3. NOT CONNECTED
4. +5V MIDI THRU
5. MIDI THRU

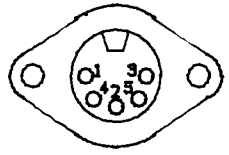

MIDI THRU

1. NOT CONNECTED
2. NOT CONNECTED
3. NOT CONNECTED
4. +5V MIDI OUT
5. MIDI OUT

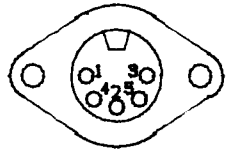

MIDI OUT

1. AK-4 OUT CHANNEL A
2. GROUND
3. NOT CONNECTED
4. AK-4 OUT CHANNEL B
5. NOT CONNECTED

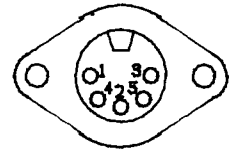

AK-4 OUT

1. AUX OUT CHANNEL A
2. GROUND
3. AUX IN CHANNEL A
4. AUX OUT CHANNEL B
5. AUX IN CHANNEL B

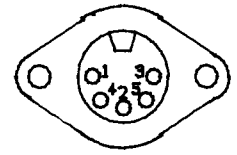

AUX IN/OUT

305 LEFT CON

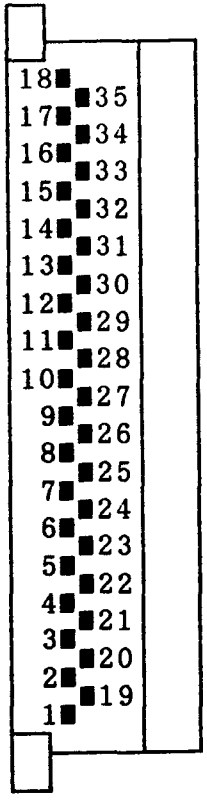

S		CH
S		CH
BLE	II	GR
BLE	II	GR
BLE	I	GR
BLE	I	GR
DLE		GR
DLE		GR
S		GR
S		GR
BLE	II	PD
BLE	II	PD
BLE	I	PD
BLE	I	PD
DLE		PD
DLE		PD
S		PD
S		PD

+	TREBLE	II	SW
-	TREBLE	II	SW
+	TREBLE	I	SW
-	TREBLE	I	SW
+	MIDDLE		SW
-	MIDDLE		SW
+	BASS		SW
-	BASS		SW
+	TREBLE	II	CH
-	TREBLE	II	CH
+	TREBLE	I	CH
-	TREBLE	I	CH
+	MIDDLE		CH
-	MIDDLE		CH

+	REED	II	GR
-	REED	II	SL
+	REED	I	SL
-	REED	I	SL
+	TREBLE	II	SL
-	TREBLE	II	SL
+	TREBLE	I	SL
-	TREBLE	I	SL
+	MIDDLE		SL
-	MIDDLE		SL
+	BASS		SL
-	BASS		SL

305 RIGHT CON

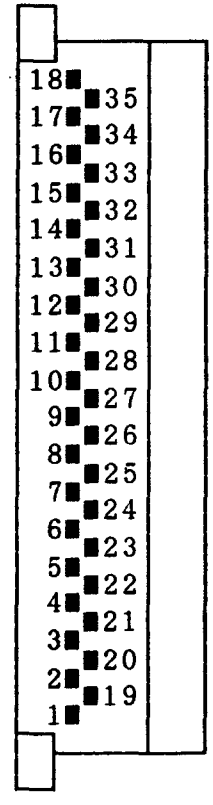

EXTERNAL CONNECTIONS (mounted on the rearside of the organ) SOLDERINGSIDEVIEW

DESIGN	LAB		REV.
DRAWN	VERSCHOOR	17-06-91	
JOHANNUS 300-SERIES			PAGE 25